REVISION RECORD			
LTR	ECO NO:	APPROVED:	DATE:

```
20221224_V0.1
%*#
20230307  V0.1-V0.2
1;4A4T8 '+!*ÉÊØ¥ÉÑ*yÉ-»ôLC notch
2;éÊÑ³yB13 LPF
3;éÊÑ³yB41 rx 5ÀW
4;ôÓÃ«`½ÉÊYB11  phase2 PAÉWÃà
5;éÊÑ³yA9T4 B7 5ÀW½ØÉÝ
6;éÊÑ³yB13 RX ®Ï»ÉÑÃÇ6712
7;ÉB8  RXÉWÃà ®Ï«.ù,ÃÎ*4I=L6730
8;éB20 RXÉÑ³y ®Ï«ÉÑÃÇ6717
9;ëB66 RX ®Ï»ÉÑÃÉÑ³yC6821
10;éÊÑ³yB20 RX*E1=C7602
11;éÊÑ³yB20 RX ®Ï»ÉÑÃÇ6717
12;éÊÑ³y®B6622-®B663Z-®B663E-®B664E-®B644E-®B641E-C6925E-C7351E-C6855E-C7436E-C7437E-C6435E-C6436
13;ëÊÕµ=GPIO48 <-> GPIO10LE= ÉàØµù,Ù¿½ì³ÃÕØ®7211tE³ÓÕ»ÓÃ
14;ëRF_CON_DET_1ÓÉGPIO S7µ=ÕùÎI*GPIO 99
15;éÊÑ³yC3622;éL6922E-®ÃÕØR8601;éC8659
16;éU8905 SPATL*!®½ØÊ?pinm»»
17;ëB1/B3 dual saw BtpinÉÑ³ÿ²eI»
18;éPAÉà³0BB/B2Bm»»
20230309
1;ëm»»»TRX½ÉE-0B/B2B¶E¿Ù
2;éÊÑ³yL6918E-L6919
3;éB28/B8 TXÏàÃçÃù,ùÕy
4;éU8905m»»pin6/ÃÃ½,CÉÊ¿Ù
5;éÀÃÕ7PS705
20230310
1;ëÕµ=GPIO48 <-> GPIO101
2;ëRF_CON_DET_1ÓÉGPIO 99µ=ÕùÎI*GPIO S7
3;éC1613Ø0,ÃÎ*0402
4;éC1829 ÓÉ100nF,ÃÎ*1µF
5;éC1640ÓÉ100nF,ÃÎ*1uF
6;éC1737;éC1734ÓÉ100nF,ÃÎ*1uF
7;éÊÑ³yC1703;éC1694
8;éÀÃÕCc1738;éC1739
20230311
1;éÀÃÕ7TPS911
2;éC6623Ø,ÃÎ*0201
3;éÊÑ³yC6940E-C6942
20230313 V0.2-V0.3
1;ëSAR IZCÓÉGPIO45 GPIO46µ=ÕùnóGPIO19 GPIO20
2;ëRF_CON_DET_1ÓÉGPIO S7µ=ÕùÎI*GPIO 99
3;éBÃÕóGPIO98
4;éàÃÕóR8517,R8524,R8520,R8521,C8516,R8512,R8513,R8515,R8514,R8518,R8516,C8528
20230315
1;ëÕµ=GPIO48 <-> GPIO101
20230316
1;éBÃÕóR4221,R4222
2;éÊÑ³yL8663 L8614 L8615E`100nH 0402EÐ
3;éàÃÕóL8663 L8614 L8615E`120nH 0201EÐL8669 L8670 L8671E`39nH 0201EÐ
4;éÊÑ³yÃTP4801
5;éÕ»ùÓÃ=ÃA8814 NC ,ÕùnÓÃ=*AR4815 ®|,µç=è
6;éÊ»ÿÃ=ÃRS2002
20230318
1;éÊ»ÿÃ=ÃC3634;éC4906
2;é*IÊéHACÉØ,Ã
20230320
1;éÕ»ùÓÃ=ÃS5910 SensorÉÃ±ÏÕÕ
2;éANTÉÑ³yC8607
3;éÕ»ùÓÃ=ÃC4906
20230321
1;éÊ»ÿÃ=ÃC8230
2;éÊ»ÿÃ=ÃL7412/C7425/L7413
3;éÊ»ÿÃ=ÃRT5701,T5701,R5709
4;éÕ»ùÓÃ=ÃTP5707,TP5706
20230322
1;éÕ»ùÓÃ=ÃR5705,R5708
2;éÕ»ùÓÃ=ÃRS2002
20230323
1;éÊ»ÿÃ=ÃR8213
2;ëµç'®=UNCpinØÐ,ÃÎ*µçÓ`pin
3;éÊ»ÿÃ=*ÃC1681
4;éÏ=*ÃC1653ÓÉ0402,ÃÎ*0603
5;éÊ»ÿµç'®MCpinÃ=ñÓ
6;éÊ»ÿR5005
20230331  V0.3-V0.4
1;éÕ»ùÓÃ=*AR4909,R4911
20230412
1;ëE8590;éE8501,ÃÎ*KSN-A12000110R-0500
2;éÕ»ùÓÃ=*AC2206 1uF 0201
3;éL8613;éL8604,ù,ÃÎ*0402 100HHµç,Ø
20230413  V0.4-V0.41
1;éÊ»ÿÃ=*AR8215
2;éL8613,ÃÎ*0201-ã×*
3;éÊ»ÿÃ=*ÃL6435,ºéÊ»ÿÕù,ôÏàÃç
4;ëP6B0*ÓÕ»ùÓB41ÃÉ'Ã-F=L6801E-ÓÕ»ùÓÉÃà³ÃC6803E-L6801W'Ïà'ØÏàÃç
4;éG60*ÓÕ»ùÓÏàÃçRF_PRX_B41_TXM
20230426
1;éÊ»ÿT4905,T4914
3;éÊ»ÿÃ=ÃR415 ³IGPIO93_ALSPS_ELDO_EN
4;ëSPMIÓÕ»ùOR2904*IR2905
20230428
1;éÕÕ»ùOR5712E-`ØD;'ÃÃ»ùÓÉ= FM_LNA ³ù½ç,ÃÎ*VPSEN_3.3V
20230504
1;éÊ»ÿÃ=*AR4410;éR4113
2;éR4109;éR4111;éR4112;éR4114ÓÉ1¼ç=è,ÃÎ*®!_
20230513
1;éÕÕ»ùOR5203E-ÉÑ³ÿ²ãÉÕµBTP5204
2;éÕÕ»ùOC5421
3;éELVDD1ÓÉTP4006ÉÑ²ù²ãÉÕµã
4;éE5905;éE5906;éE5910Éÿ,ôµ'Ã-ÀàØÍ¿ ù»=I*KSN-A12000110R-0500 _ANT
20230514
1;éÊ»ÿC2004
2;ëRF_B41=`Ó-»ØEWDVT1'æs%
3;ëSPMIÉÑ³yR2904*IR2905
20230516
1;ëSAR_INTOÉGPIO_58 µ=ÕùnóGPIO_88
2;éÏIi»OR1501µç=è
```

DRAWN: hongxuan.wei	DATED: 20210723
CHECKED: <Checked By>	DATED: <Checked Date>
QUALITY CONTROL: <QC By>	DATED: <QC Date>
RELEASED: <Released By>	DATED: <Release Date>

COMPANY: TINNO MOBILE TECHNOLOGY CO.LTD			
TITLE: P652A_MAIN			
CODE: P652A	SIZE: D	DRAWING NO: P652A	REV: V0.1
SCALE: <Scale>		SHEET: 1 OF 59	

REVISION RECORD			
LTR	ECO NO:	APPROVED:	DATE:

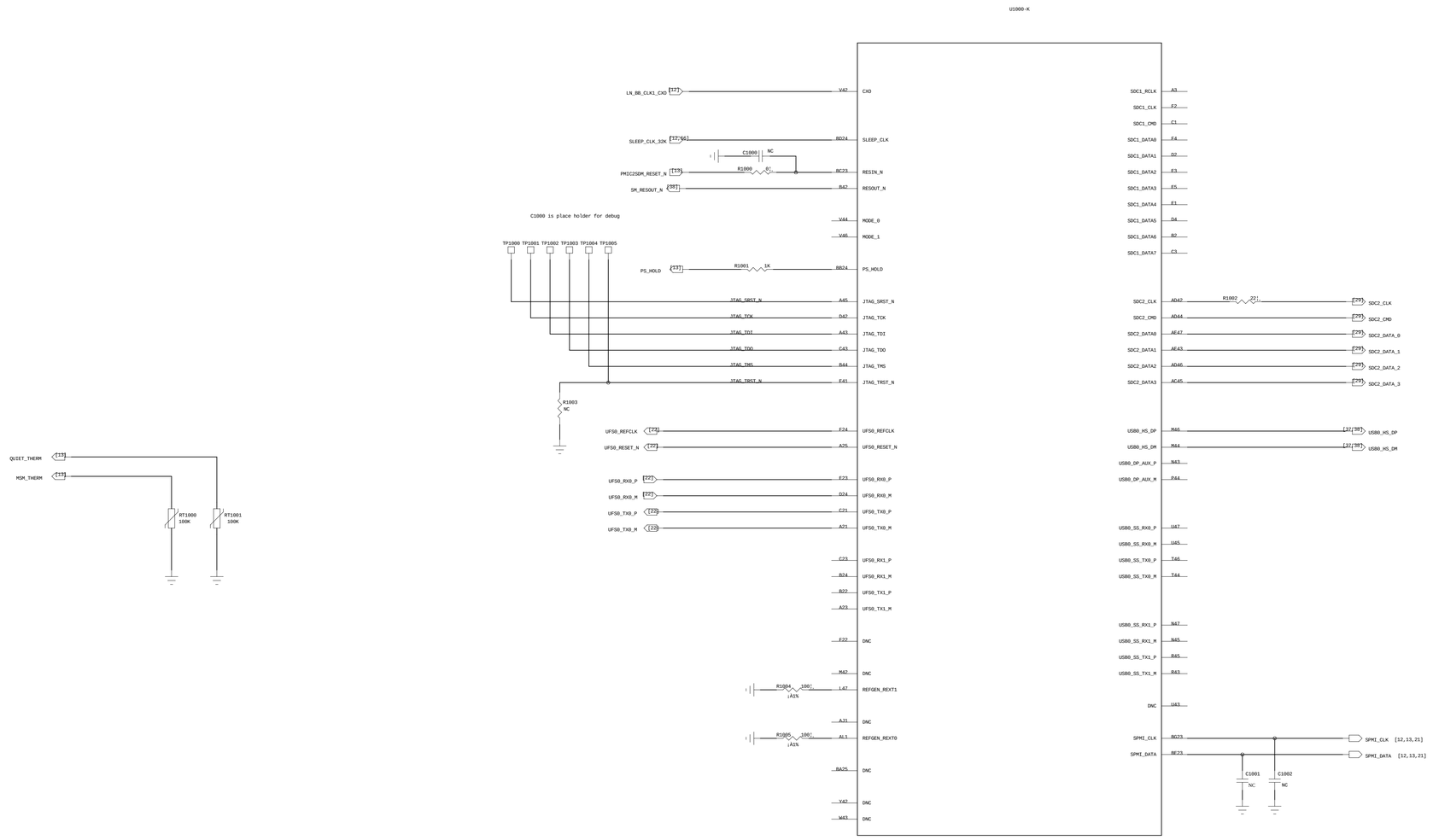

COMPANY: TINNO MOBILE TECHNOLOGY CO.LTD			
TITLE: P652A_MAIN			
DRAWN: hongxuan.wei	DATED: 20210723		
CHECKED: <Checked By>	DATED: <Checked Date>		
QUALITY CONTROL: <QC By>	DATED: <QC Date>		
RELEASED: <Released By>	DATED: <Release Date>		
CODE: P652A	SIZE: D	DRAWING NO: P652A	REV: V0.1
SCALE: <Scale>		SHEET: 2 OF 59	

REVISION RECORD			
LTR	ECO NO:	APPROVED:	DATE:

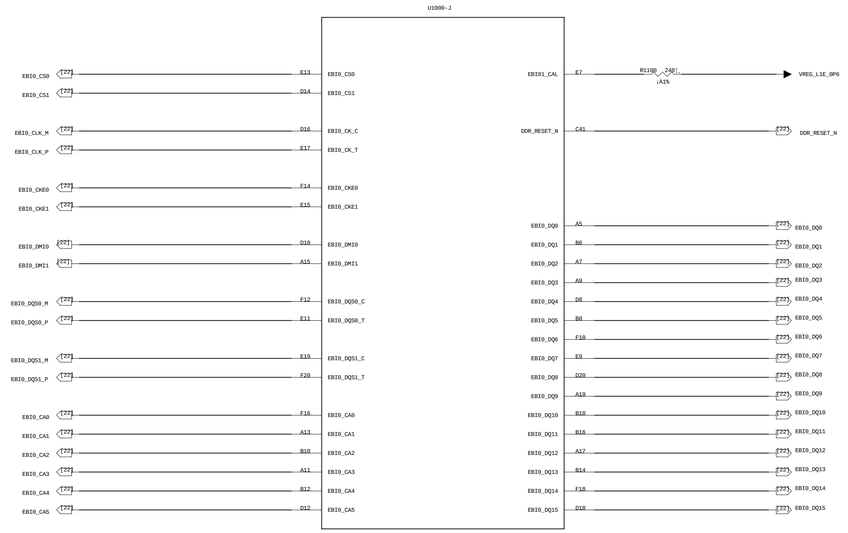

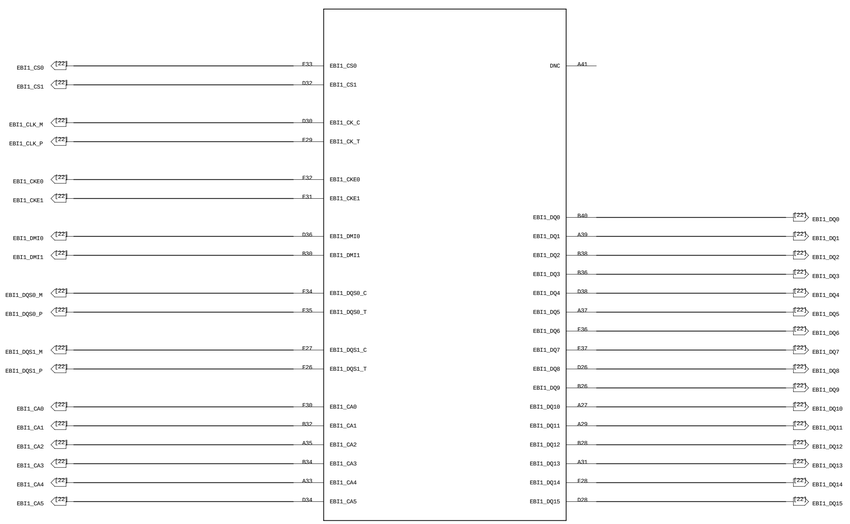

DRAWN: hongxuan.wei	DATED: 20210723	COMPANY: TINNO MOBILE TECHNOLOGY CO.LTD			
CHECKED: <Checked By>	DATED: <Checked Date>	TITLE: P652A_MAIN			
QUALITY CONTROL: <QC By>	DATED: <QC Date>	CODE: P652A	SIZE: D	DRAWING NO: P652A	REV: V0.1
RELEASED: <Released By>	DATED: <Release Date>	SCALE: <Scale>		SHEET: 3 OF 59	

REVISION RECORD			
LTR	ECO NO:	APPROVED:	DATE:

U1000-H

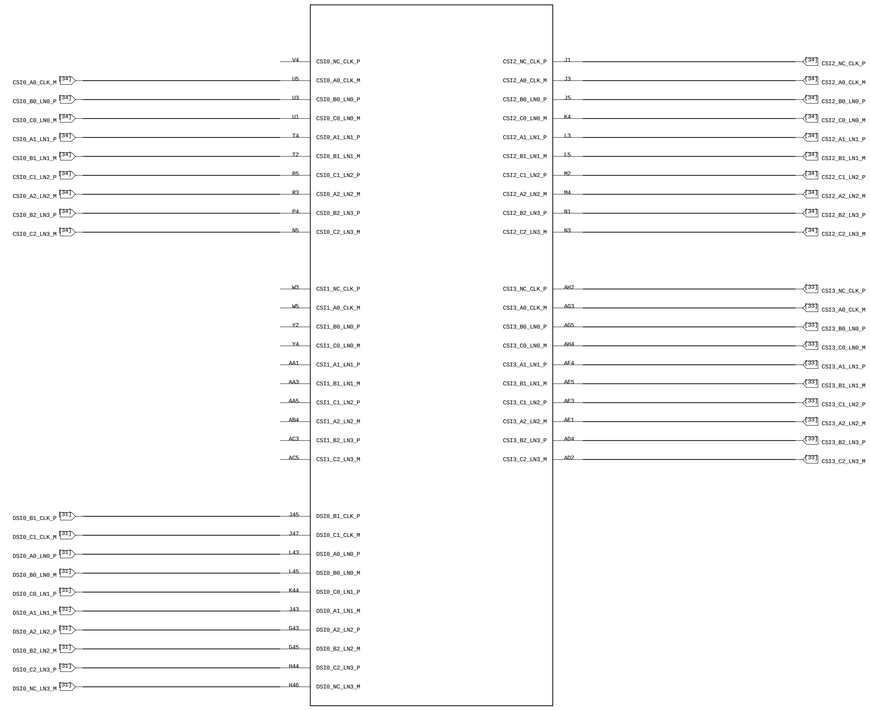

COMPANY: TINNO MOBILE TECHNOLOGY CO.LTD			
TITLE: P652A_MAIN			
CODE: P652A	SIZE: D	DRAWING NO: P652A	REV: V0.1
SCALE: <Scale>		SHEET: 4 OF 59	

DRAWN: hongxuan.wei	DATED: 20210723
CHECKED: <Checked By>	DATED: <Checked Date>
QUALITY CONTROL: <QC By>	DATED: <QC Date>
RELEASED: <Released By>	DATED: <Release Date>

REVISION RECORD			
LTR	ECO NO:	APPROVED:	DATE:

CAD NOTE: Keep the resistors on the MSM REXT pins near to MSM and away from noisy signals.

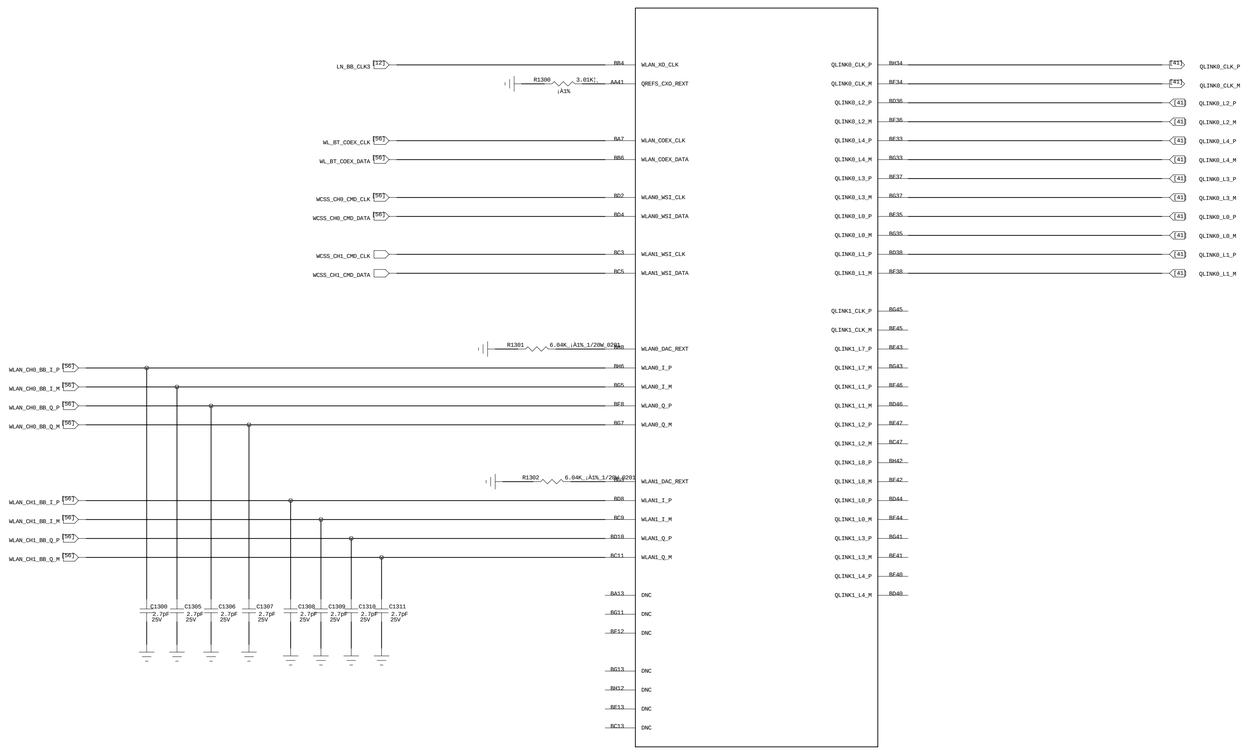

COMPANY: TINNO MOBILE TECHNOLOGY CO.LTD			
TITLE: P652A_MAIN			
DRAWN: hongxuan.wei	DATED: 20210723		
CHECKED: <Checked By>	DATED: <Checked Date>	CODE: P652A	SIZE: D
QUALITY CONTROL: <QC By>	DATED: <QC Date>	DRAWING NO: P652A	REV: V0.1
RELEASED: <Released By>	DATED: <Release Date>	SCALE: <Scale>	SHEET: 5 OF 59

REVISION RECORD			
LTR	ECO NO:	APPROVED:	DATE:

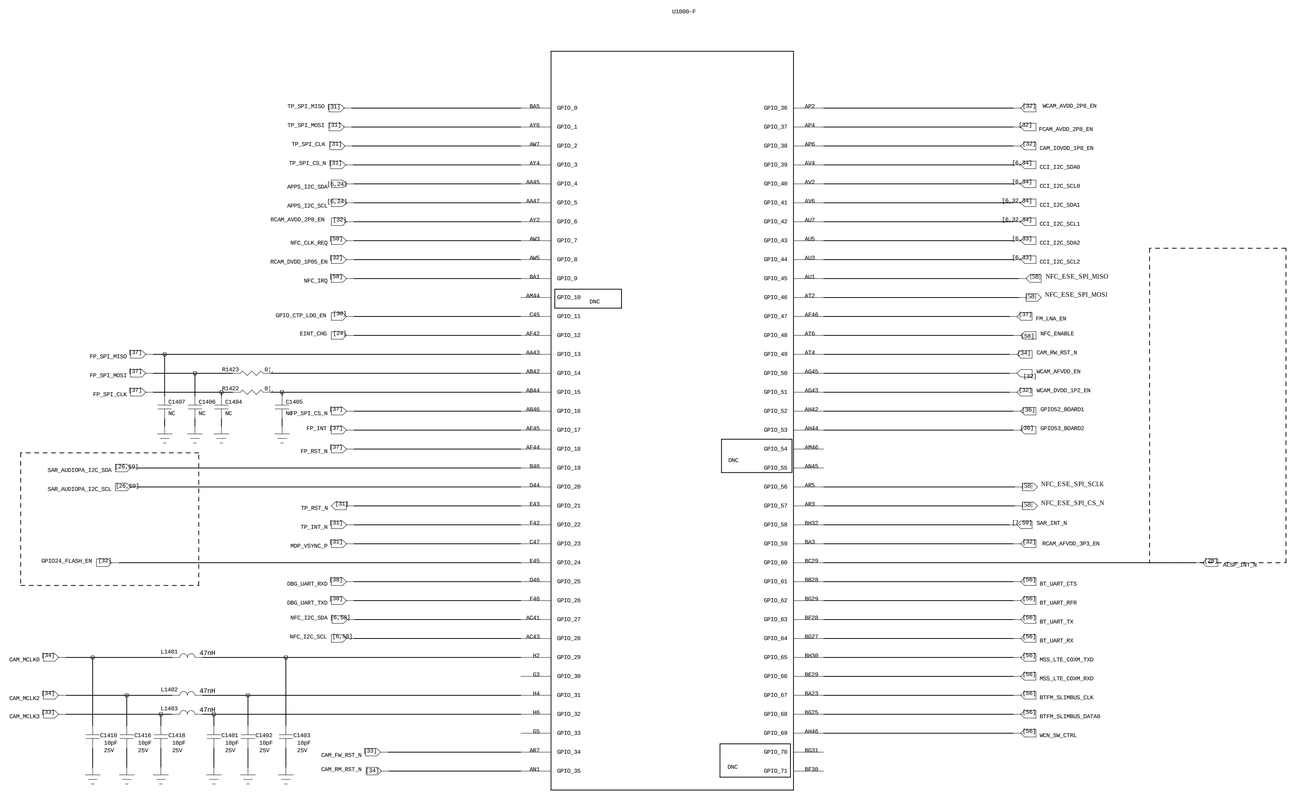

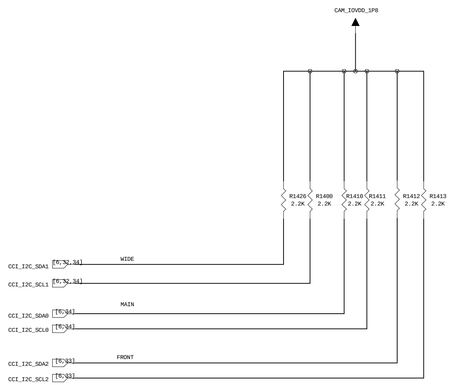

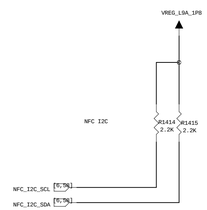

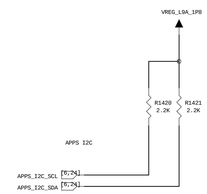

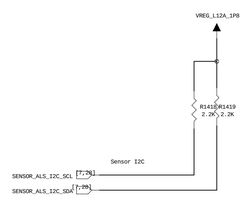

DRAWN: hongxuan.wei	DATED: 20210723	COMPANY: TINNO MOBILE TECHNOLOGY CO.LTD		
CHECKED: <Checked By>	DATED: <Checked Date>	TITLE: P652A_MAIN		
QUALITY CONTROL: <QC By>	DATED: <QC Date>	CODE: P652A	SIZE: D	DRAWING NO: P652A / REV: V0.1
RELEASED: <Released By>	DATED: <Release Date>	SCALE: <Scale>	SHEET: 6 OF 59	

REVISION RECORD			
LTR	ECO NO:	APPROVED:	DATE:

U1000-E

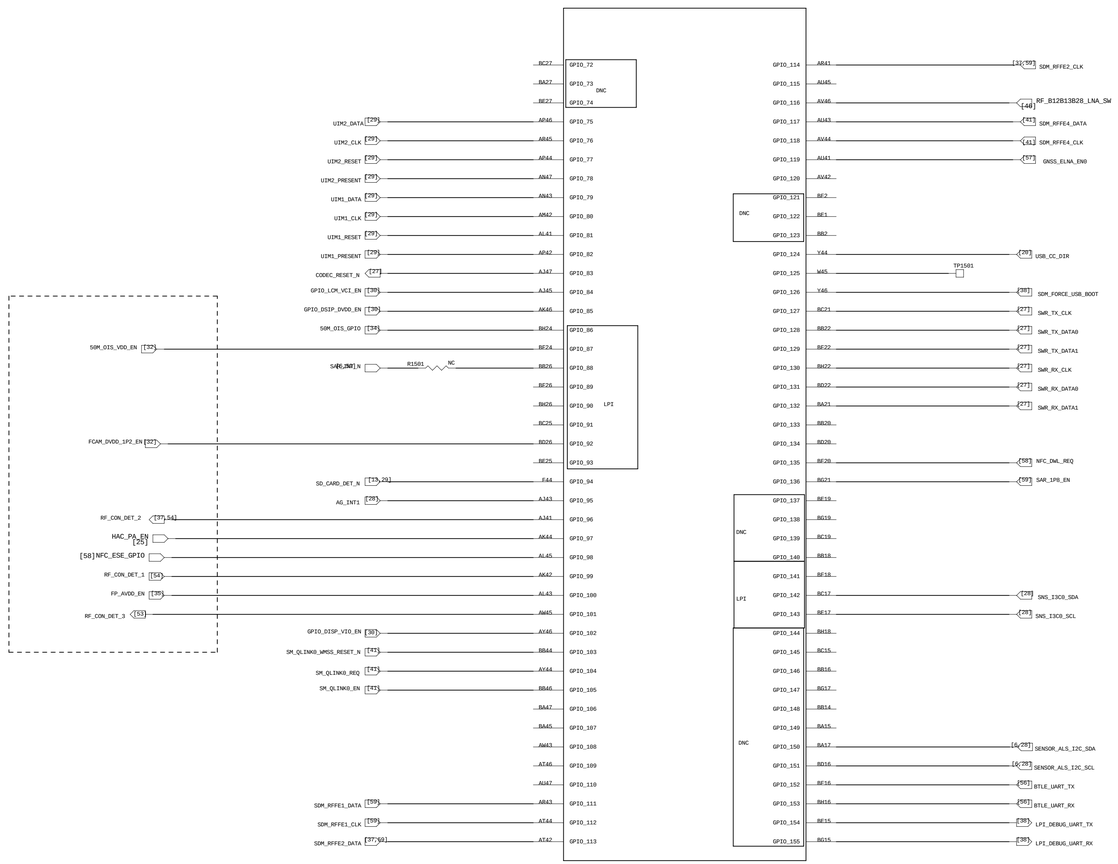

DRAWN: hongxuan.wei	DATED: 20210723
CHECKED: <Checked By>	DATED: <Checked Date>
QUALITY CONTROL: <QC By>	DATED: <QC Date>
RELEASED: <Released By>	DATED: <Release Date>

COMPANY: TINNO MOBILE TECHNOLOGY CO.LTD			
TITLE: P652A_MAIN			
CODE: P652A	SIZE: D	DRAWING NO: P652A	REV: V0.1
SCALE: <Scale>		SHEET: 7 OF 59	

REVISION RECORD			
LTR	ECO NO:	APPROVED:	DATE:

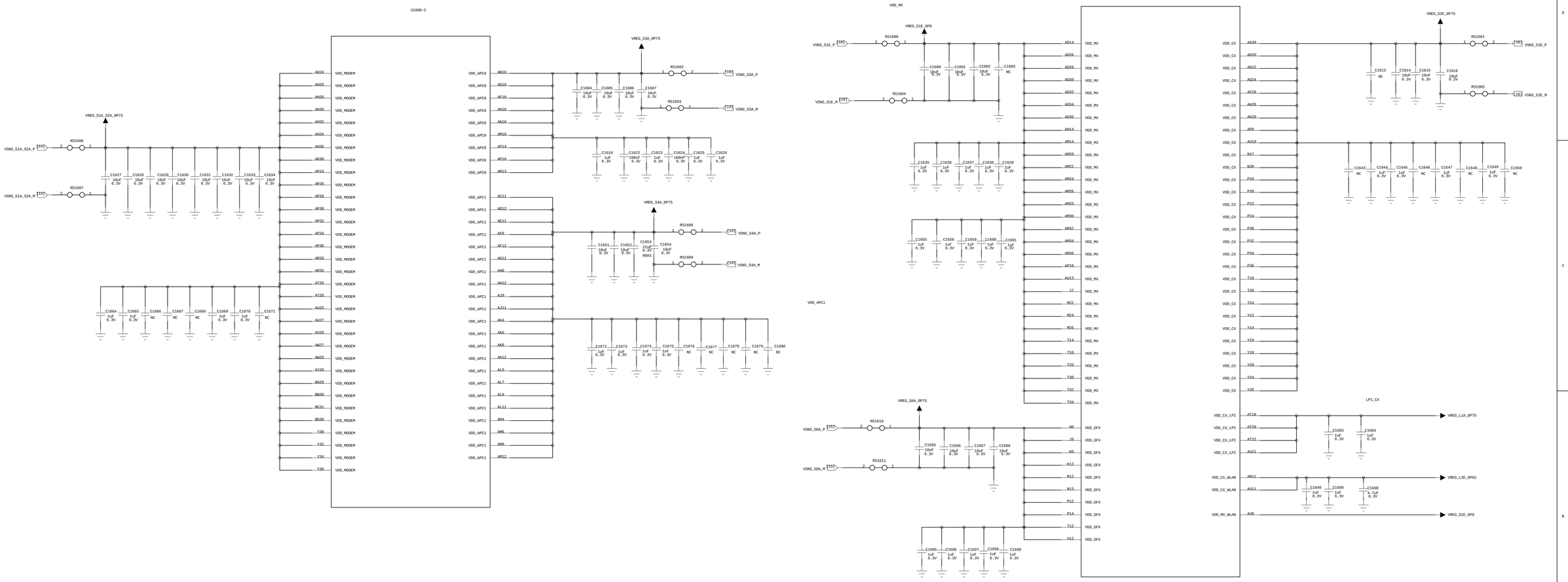

DRAWN: hongxuan.wei	DATED: 20210723	COMPANY: TINNO MOBILE TECHNOLOGY CO.LTD	
CHECKED: <Checked By>	DATED: <Checked Date>	TITLE: P652A_MAIN	
QUALITY CONTROL: <QC By>	DATED: <QC Date>	CODE: P652A / SIZE: D / DRAWING NO: P652A	REV: V0.1
RELEASED: <Released By>	DATED: <Release Date>	SCALE: <Scale>	SHEET: 8 OF 59

REVISION RECORD			
LTR	ECO NO:	APPROVED:	DATE:

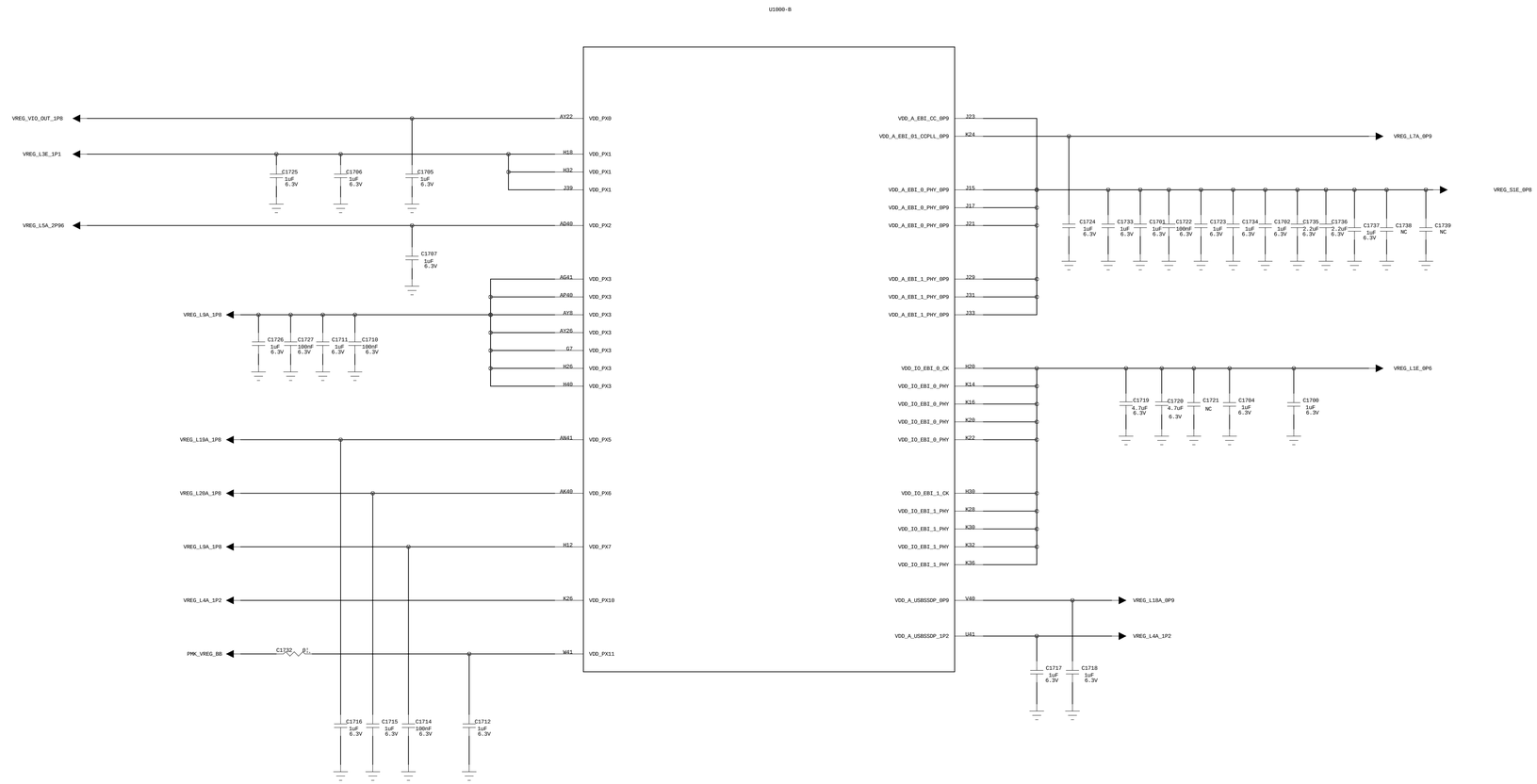

COMPANY: TINNO MOBILE TECHNOLOGY CO.LTD			
TITLE: P652A_MAIN			
DRAWN: hongxuan.wei	DATED: 20210723		
CHECKED: <Checked By>	DATED: <Checked Date>		
QUALITY CONTROL: <QC By>	DATED: <QC Date>		
RELEASED: <Released By>	DATED: <Release Date>		
CODE: P652A	SIZE: D	DRAWING NO: P652A	REV: V0.1
SCALE: <Scale>		SHEET: 9 OF 59	

REVISION RECORD			
LTR	ECO NO:	APPROVED:	DATE:

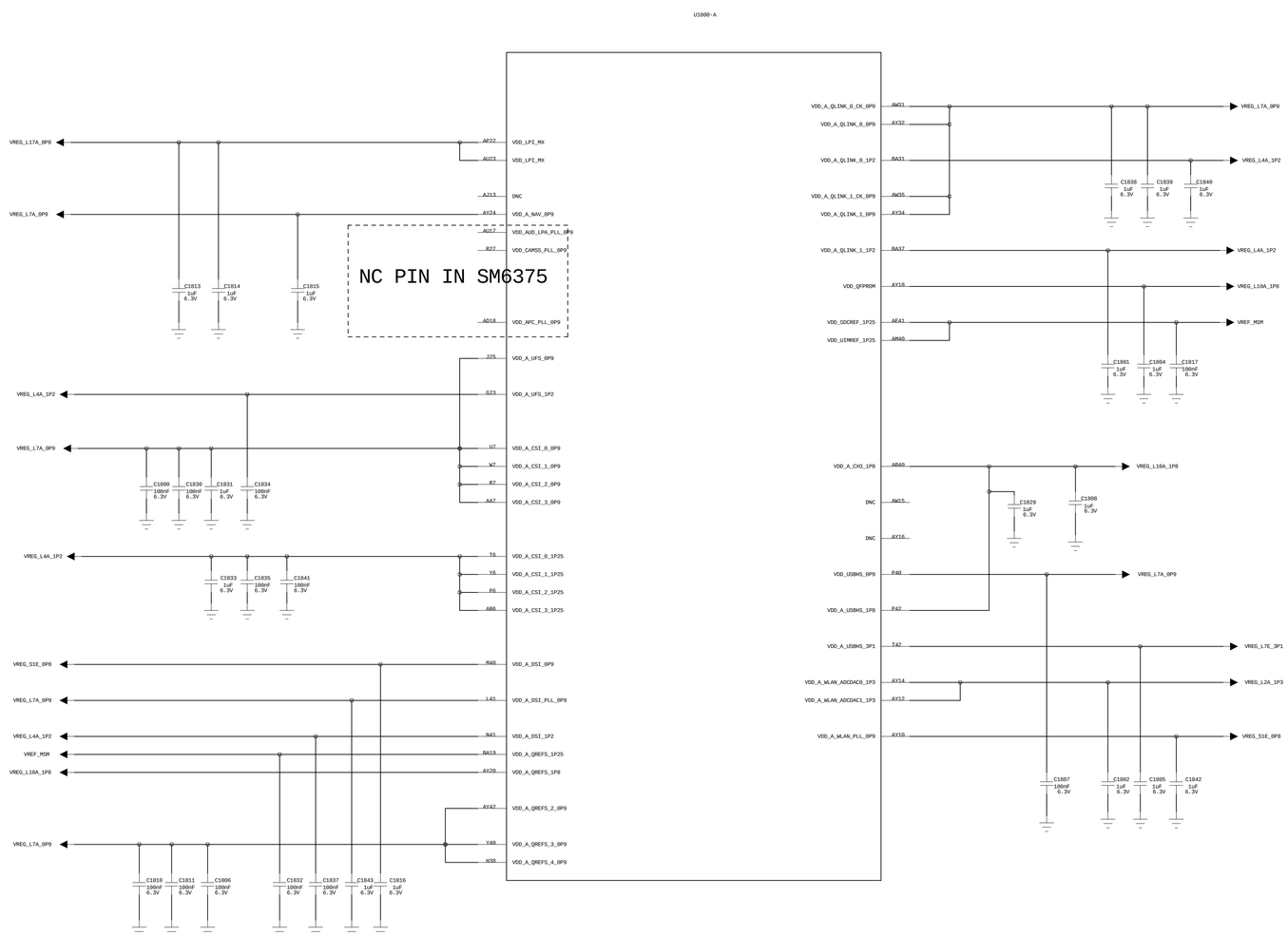

DRAWN: hongxuan.wei	DATED: 20210723	COMPANY: TINNO MOBILE TECHNOLOGY CO.LTD	
CHECKED: <Checked By>	DATED: <Checked Date>	TITLE: P652A_MAIN	
QUALITY CONTROL: <QC By>	DATED: <QC Date>	CODE: P652A / SIZE: D / DRAWING NO: P652A	REV: V0.1
RELEASED: <Released By>	DATED: <Release Date>	SCALE: <Scale>	SHEET: 18 of 59

REVISION RECORD			
LTR	ECO NO:	APPROVED:	DATE:

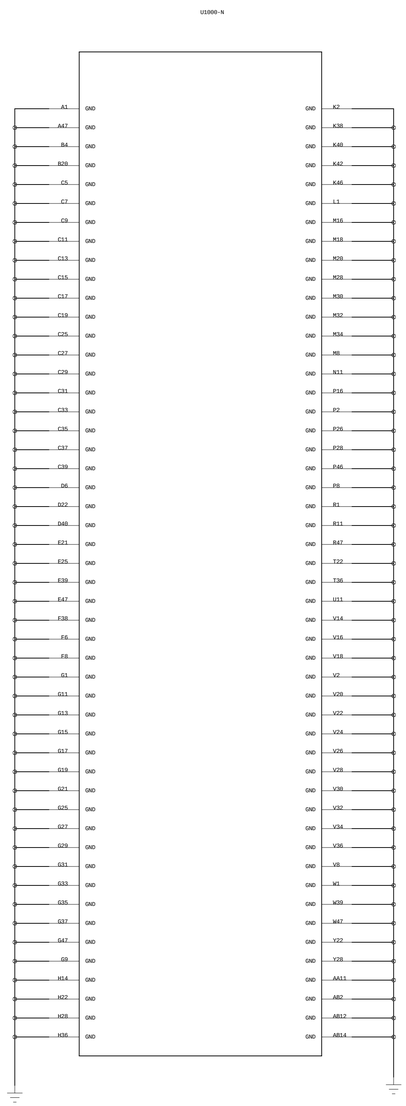

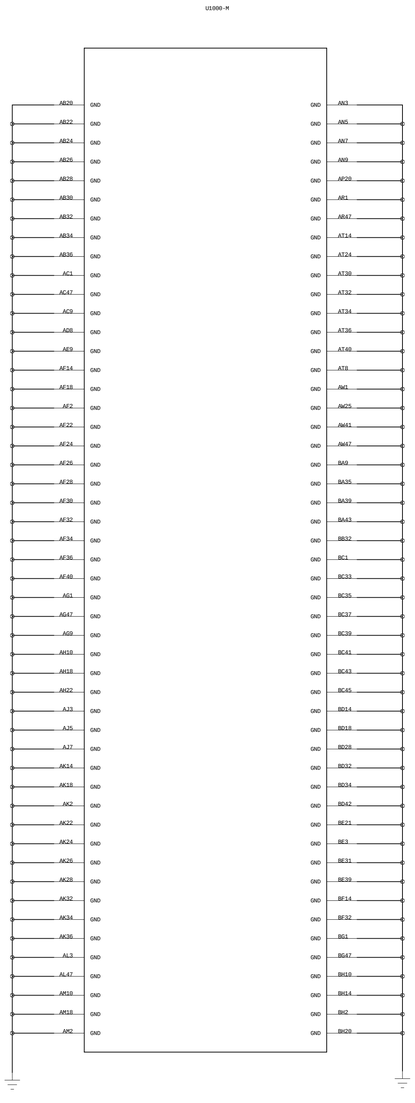

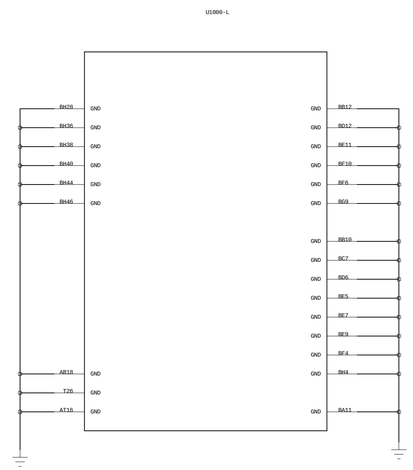

DRAWN: hongxuan.wei	DATED: 20210723
CHECKED: <Checked By>	DATED: <Checked Date>
QUALITY CONTROL: <QC By>	DATED: <QC Date>
RELEASED: <Released By>	DATED: <Release Date>

COMPANY: TINNO MOBILE TECHNOLOGY CO.LTD

TITLE: P652A_MAIN

CODE:	SIZE:	DRAWING NO:	REV:
P652A	D	P652A	V0.1

SCALE: <Scale> SHEET: 11 OF 59

REVISION RECORD			
LTR	ECO NO:	APPROVED:	DATE:

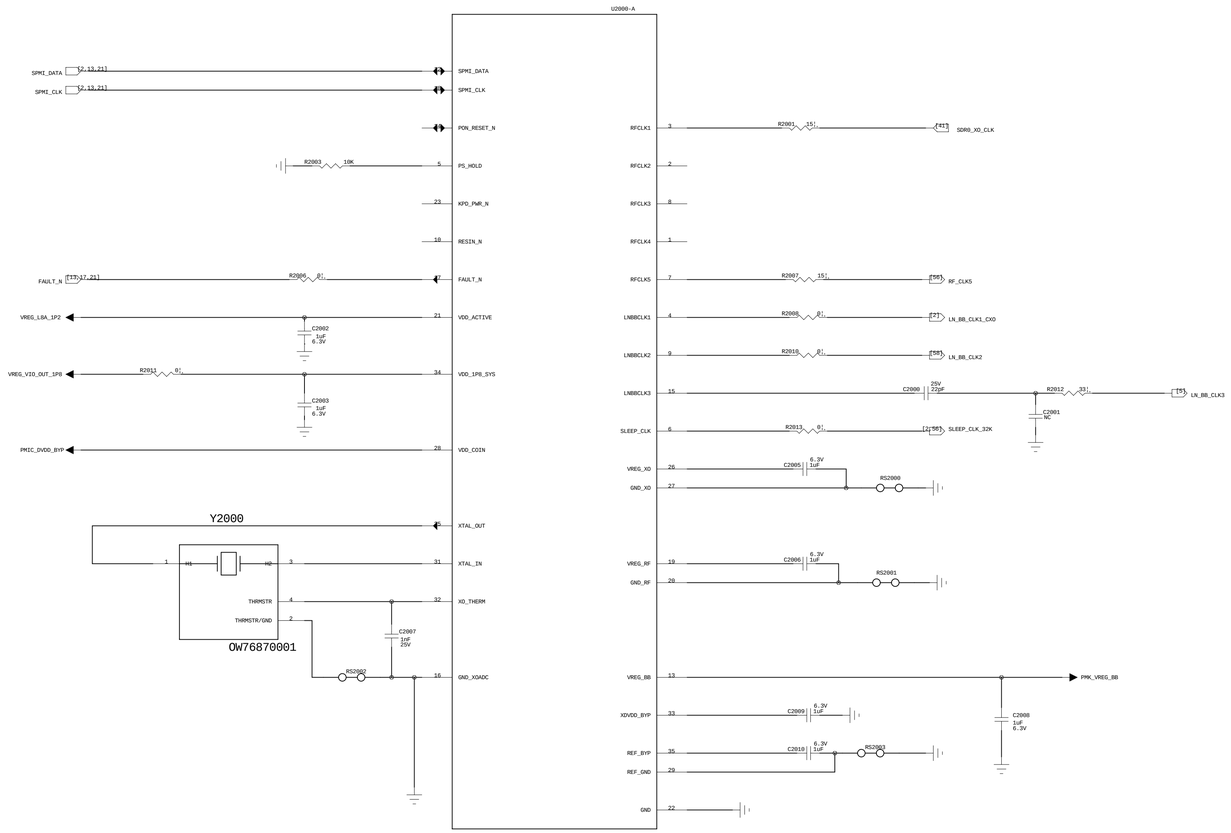

COMPANY: TINNO MOBILE TECHNOLOGY CO.LTD			
TITLE: P652A_MAIN			
CODE: P652A	SIZE: D	DRAWING NO: P652A	REV: V0.1
SCALE: <Scale>		SHEET: 12 of 59	
DRAWN: hongxuan.wei	DATED: 20210723		
CHECKED: <Checked By>	DATED: <Checked Date>		
QUALITY CONTROL: <QC By>	DATED: <QC Date>		
RELEASED: <Released By>	DATED: <Release Date>		

REVISION RECORD			
LTR	ECO NO:	APPROVED:	DATE:

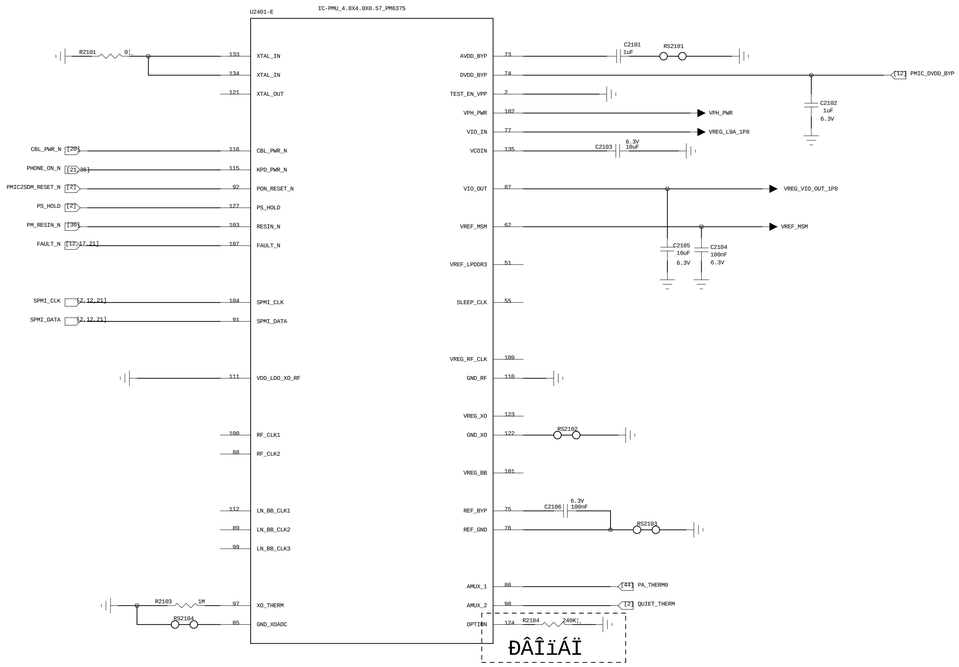

Change to 240K/750K ; NO SDCARD BOOT

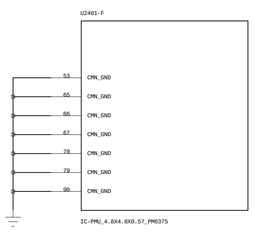

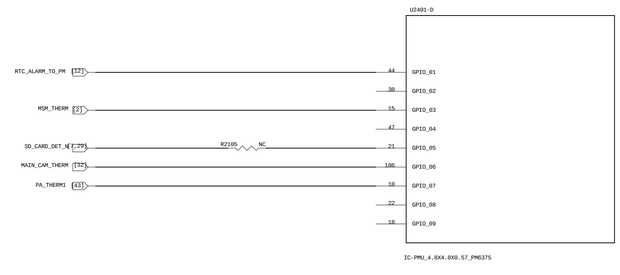

COMPANY: TINNO MOBILE TECHNOLOGY CO.LTD			
TITLE: P652A_MAIN			
DRAWN: hongxuan.wei	DATED: 20210723		
CHECKED: <Checked By>	DATED: <Checked Date>		
QUALITY CONTROL: <QC By>	DATED: <QC Date>		
RELEASED: <Released By>	DATED: <Release Date>		
CODE: P652A	SIZE: D	DRAWING NO: P652A	REV: V0.1
SCALE: <Scale>		SHEET: 13 of 59	

REVISION RECORD			
LTR	ECO NO:	APPROVED:	DATE:

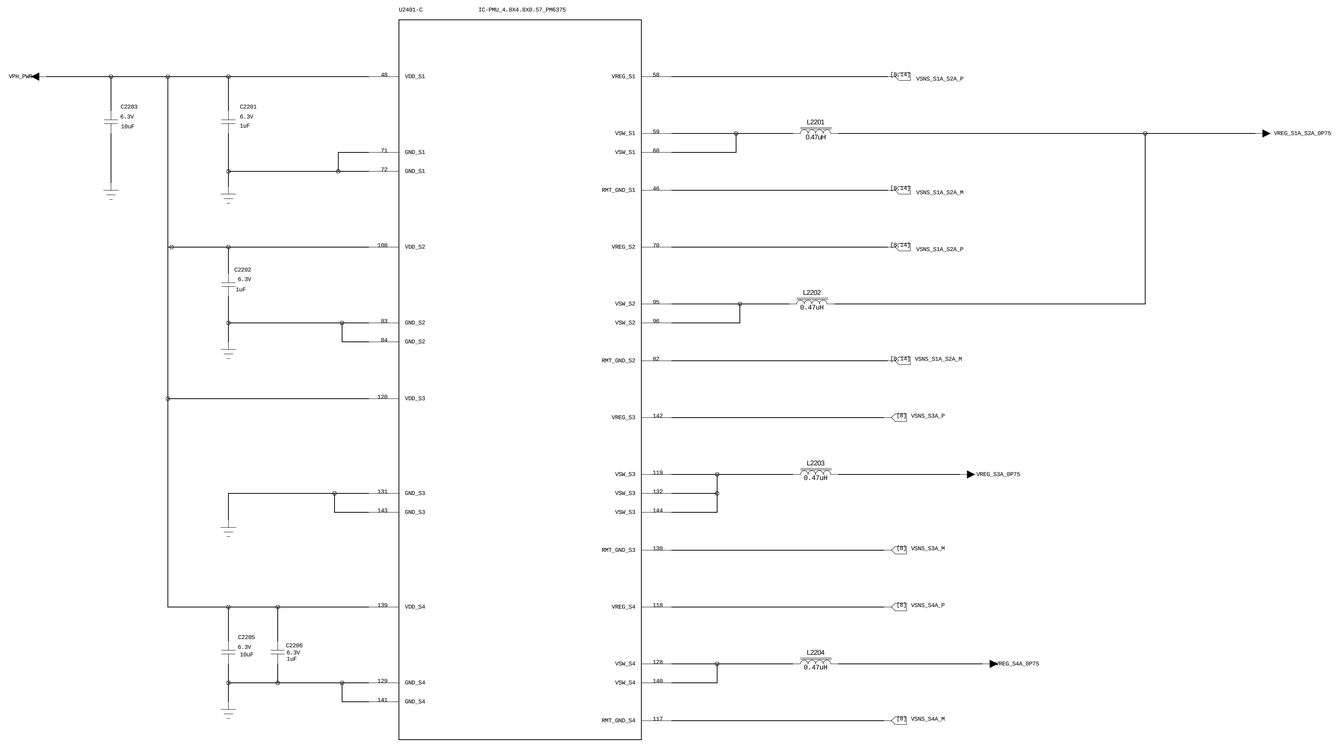

DRAWN: hongxuan.wei	DATED: 20210723	COMPANY: TINNO MOBILE TECHNOLOGY CO.LTD	
CHECKED: <Checked By>	DATED: <Checked Date>	TITLE: P652A_MAIN	
QUALITY CONTROL: <QC By>	DATED: <QC Date>	CODE: P652A / SIZE: D / DRAWING NO: P652A	REV: V0.1
RELEASED: <Released By>	DATED: <Release Date>	SCALE: <Scale>	SHEET: 14 OF 59

REVISION RECORD			
LTR	ECO NO:	APPROVED:	DATE:

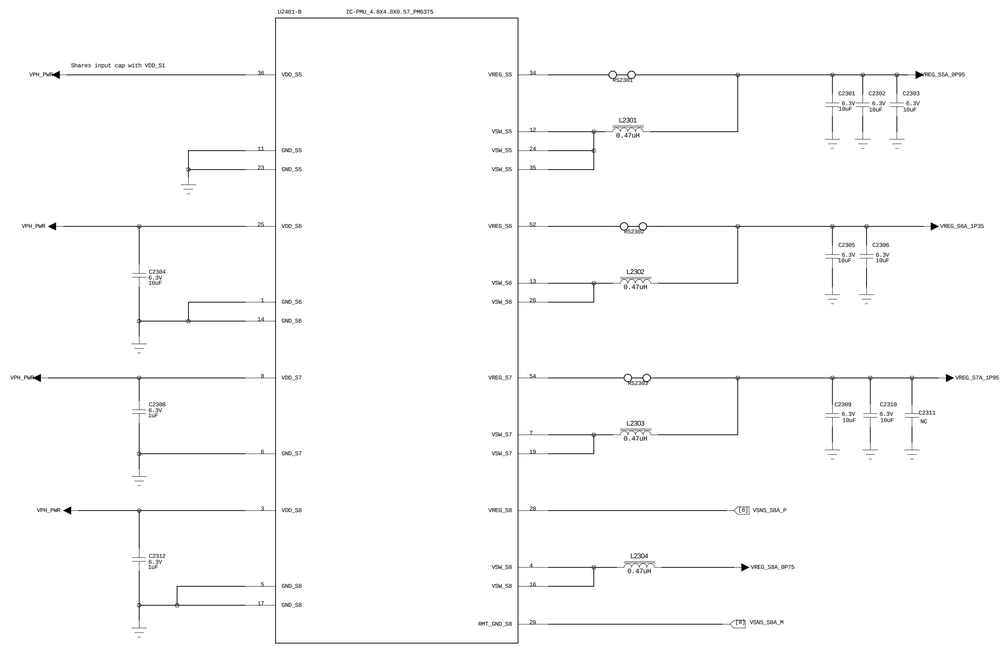

DRAWN: hongxuan.wei	DATED: 20210723		
CHECKED: <Checked By>	DATED: <Checked Date>		
QUALITY CONTROL: <QC By>	DATED: <QC Date>		
RELEASED: <Released By>	DATED: <Release Date>		

COMPANY: TINNO MOBILE TECHNOLOGY CO.LTD			
TITLE: P652A_MAIN			
CODE: P652A	SIZE: D	DRAWING NO: P652A	REV: V0.1
SCALE: <Scale>		SHEET: 10 OF 59	

REVISION RECORD			
LTR	ECO NO:	APPROVED:	DATE:

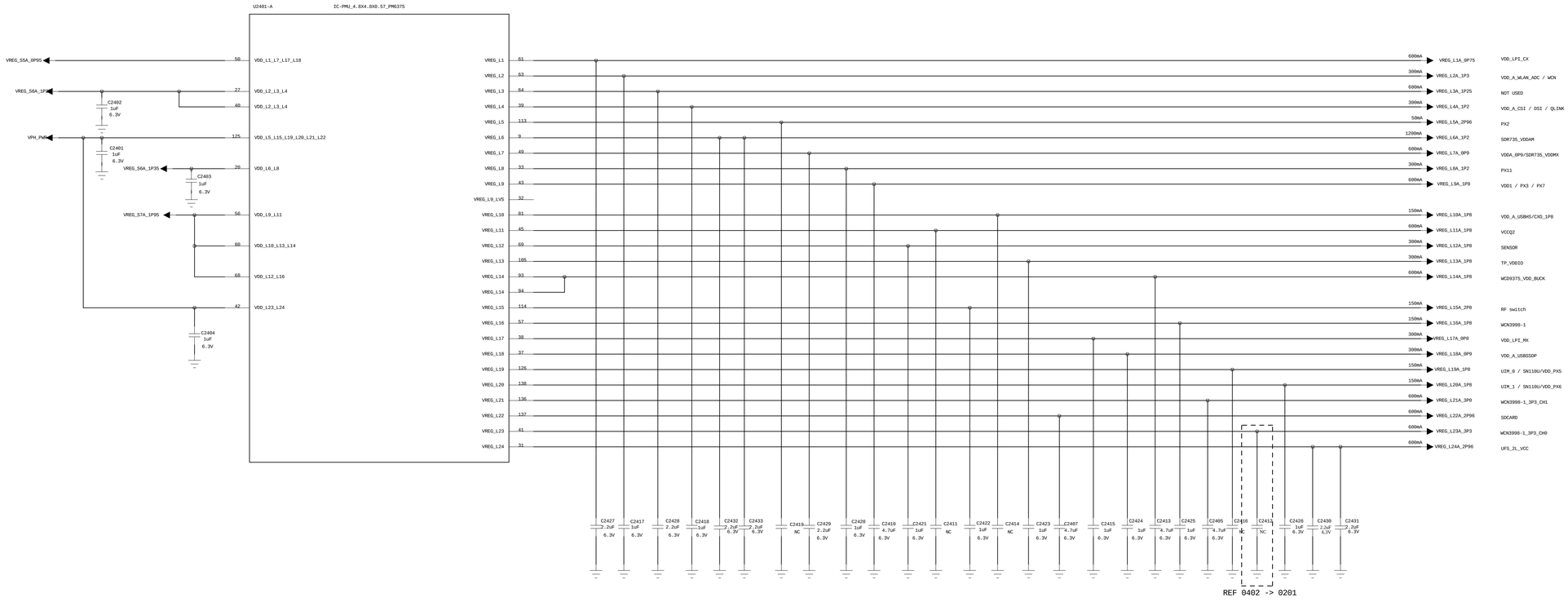

REF 0402 -> 0201

DRAWN: hongxuan.wei	DATED: 20210723
CHECKED: <Checked By>	DATED: <Checked Date>
QUALITY CONTROL: <QC By>	DATED: <QC Date>
RELEASED: <Released By>	DATED: <Release Date>

COMPANY: TINNO MOBILE TECHNOLOGY CO.LTD

TITLE: P652A_MAIN

CODE:	SIZE:	DRAWING NO:	REV:
P652A	D	P652A	V0.1

SCALE: <Scale> SHEET: 16 OF 59

REVISION RECORD			
LTR	ECO NO:	APPROVED:	DATE:

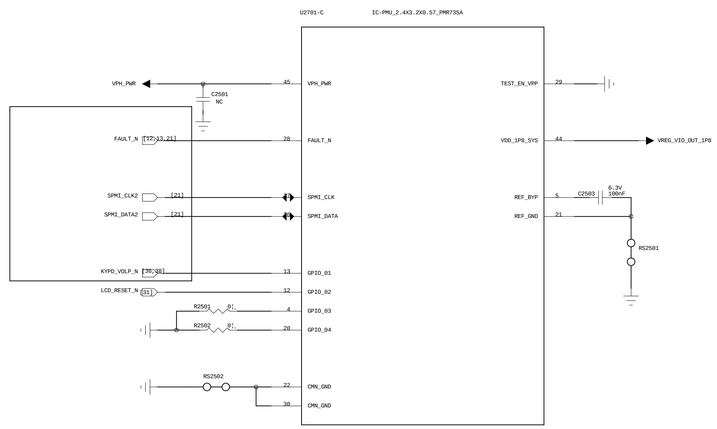

COMPANY: TINNO MOBILE TECHNOLOGY CO.LTD			
TITLE: P652A_MAIN			
CODE: P652A	SIZE: D	DRAWING NO: P652A	REV: V0.1
SCALE: <Scale>		SHEET: 17 OF 59	

DRAWN: hongxuan.wei	DATED: 20210723
CHECKED: <Checked By>	DATED: <Checked Date>
QUALITY CONTROL: <QC By>	DATED: <QC Date>
RELEASED: <Released By>	DATED: <Release Date>

REVISION RECORD			
LTR	ECO NO:	APPROVED:	DATE:

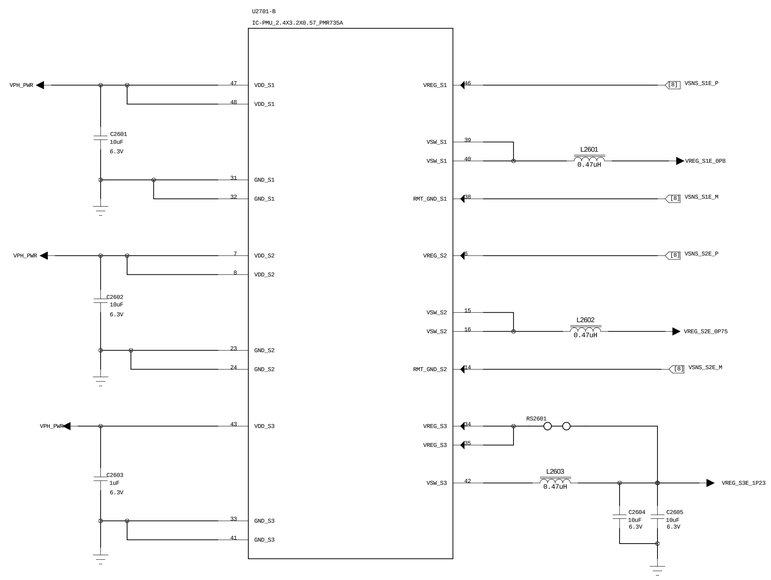

DRAWN: hongxuan.wei	DATED: 20210723	COMPANY: TINNO MOBILE TECHNOLOGY CO.LTD			
		TITLE: P652A_MAIN			
CHECKED: <Checked By>	DATED: <Checked Date>	CODE: P652A	SIZE: D	DRAWING NO: P652A	REV: V0.1
QUALITY CONTROL: <QC By>	DATED: <QC Date>				
RELEASED: <Released By>	DATED: <Release Date>	SCALE: <Scale>		SHEET: 18 OF 59	

REVISION RECORD			
LTR	ECO NO:	APPROVED:	DATE:

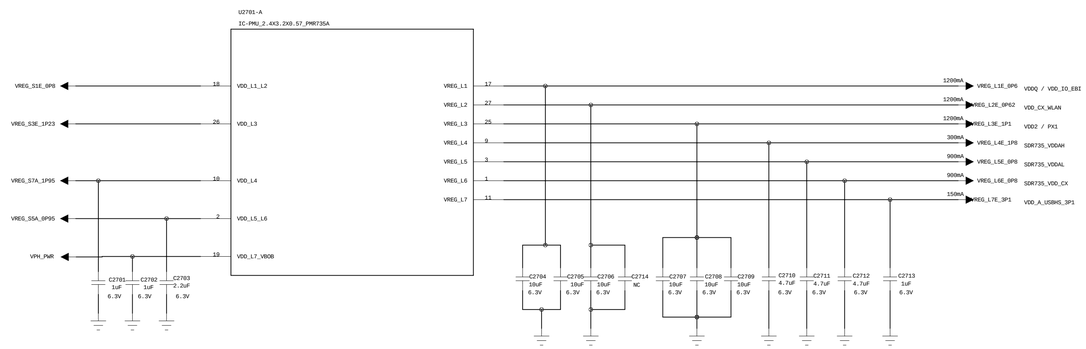

DRAWN: hongxuan.wei	DATED: 20210723	COMPANY: TINNO MOBILE TECHNOLOGY CO.LTD		
CHECKED: <Checked By>	DATED: <Checked Date>	TITLE: P652A_MAIN		
QUALITY CONTROL: <QC By>	DATED: <QC Date>	CODE: P652A	SIZE: D	DRAWING NO: P652A / REV: V0.1
RELEASED: <Released By>	DATED: <Release Date>	SCALE: <Scale>	SHEET: 10 OF 59	

REVISION RECORD			
LTR	ECO NO:	APPROVED:	DATE:

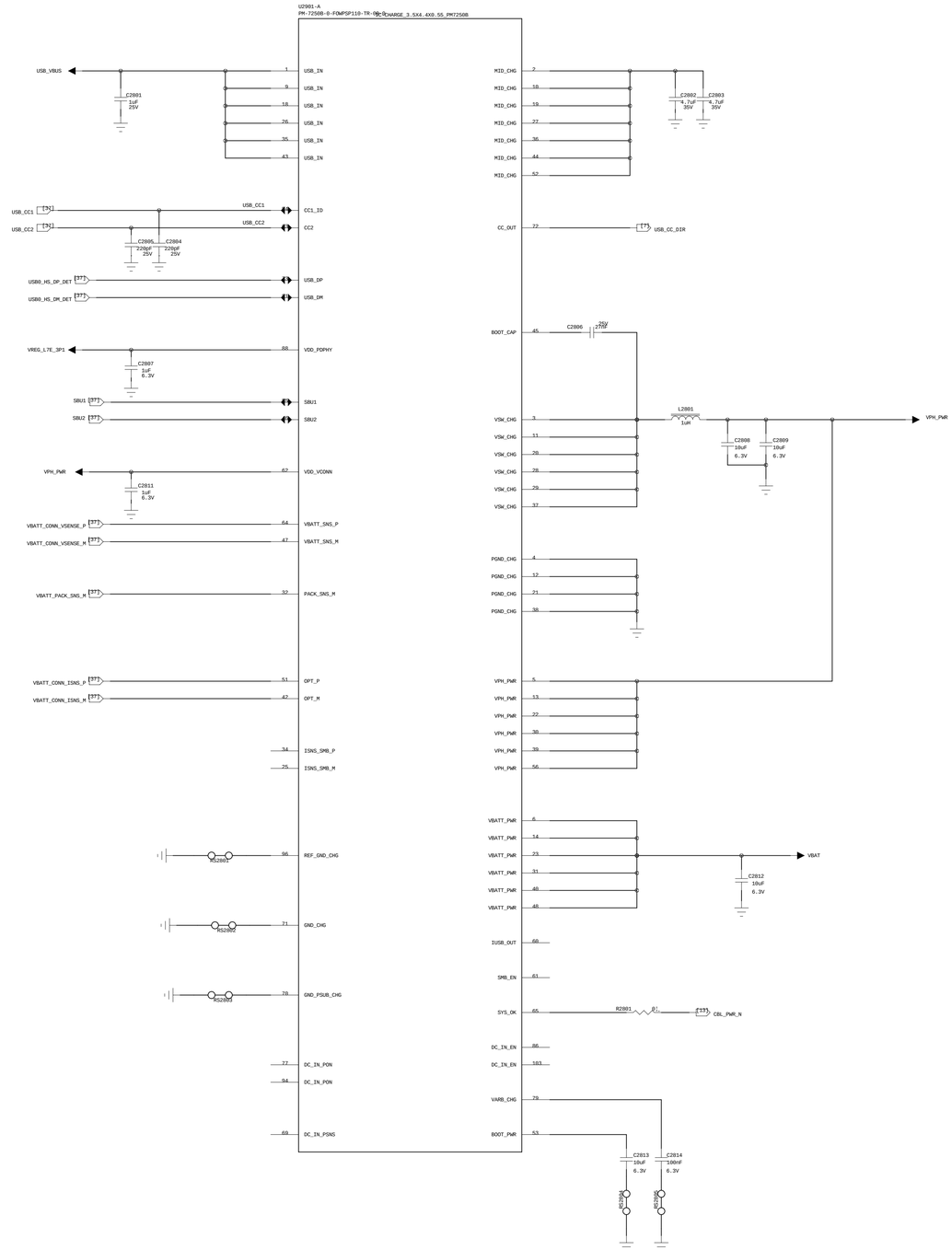

COMPANY: TINNO MOBILE TECHNOLOGY CO.LTD			
TITLE: P652A_MAIN			
DRAWN: hongxuan.wei	DATED: 20210723		
CHECKED: <Checked By>	DATED: <Checked Date>	CODE: P652A	SIZE: D	DRAWING NO: P652A	REV: V0.1
QUALITY CONTROL: <QC By>	DATED: <QC Date>		
RELEASED: <Released By>	DATED: <Release Date>	SCALE: <Scale>	SHEET: 20 OF 59

REVISION RECORD			
LTR	ECO NO:	APPROVED:	DATE:

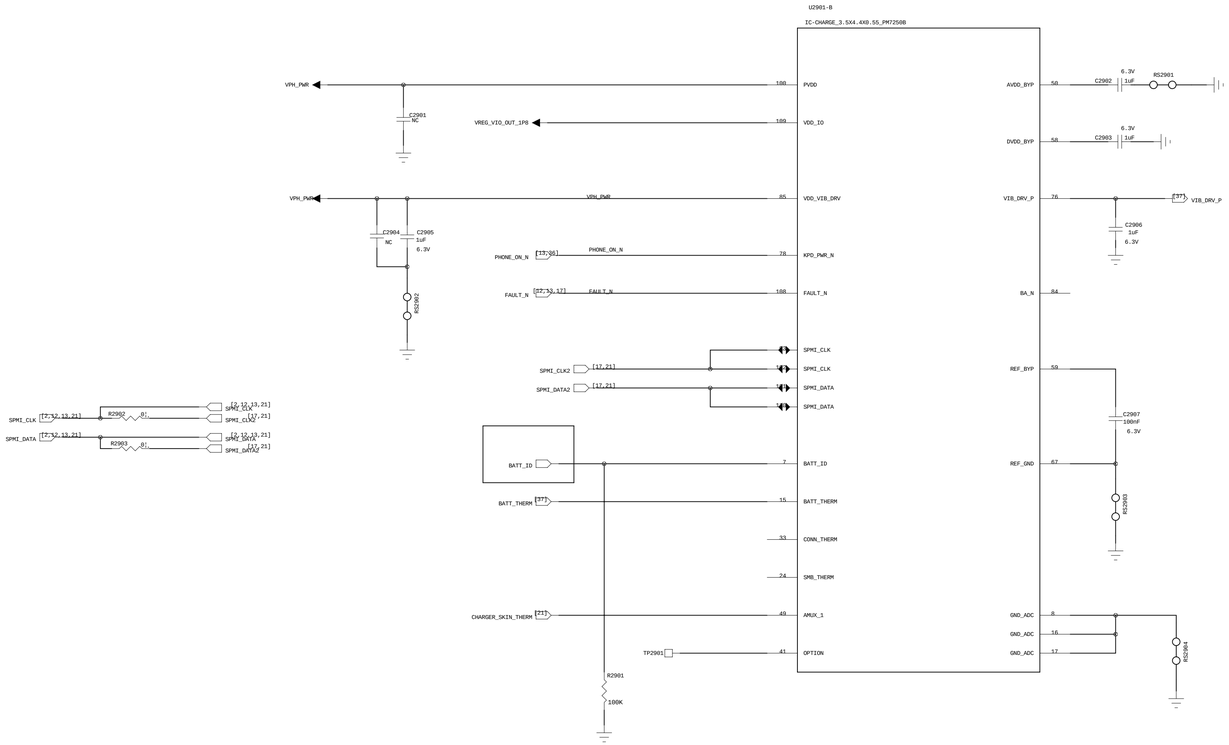

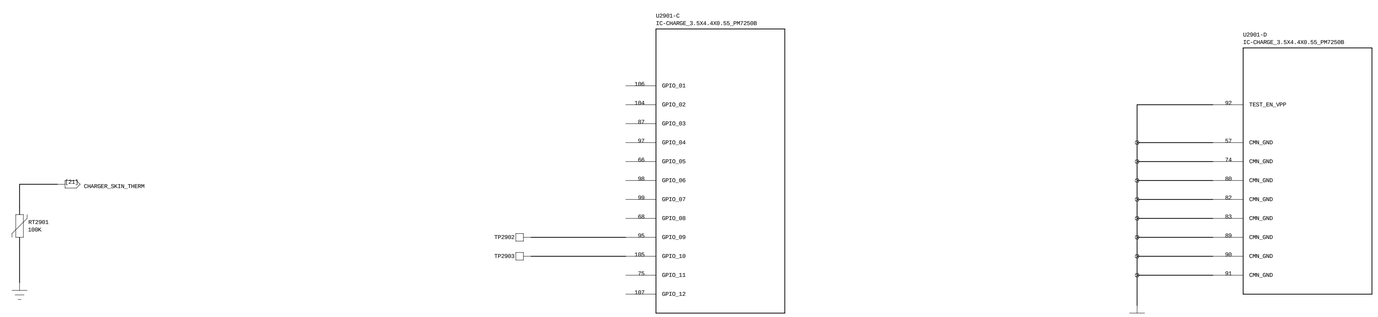

COMPANY: TINNO MOBILE TECHNOLOGY CO.LTD			
TITLE: P652A_MAIN			
DRAWN: hongxuan.wei	DATED: 20210723		
CHECKED: <Checked By>	DATED: <Checked Date>		
QUALITY CONTROL: <QC By>	DATED: <QC Date>		
RELEASED: <Released By>	DATED: <Release Date>		
CODE: P652A	SIZE: D	DRAWING NO: P652A	REV: V0.1
SCALE: <Scale>		SHEET: 21 OF 59	

REVISION RECORD			
LTR	ECO NO:	APPROVED:	DATE:

SS uMCP MCN 271-93557-0001
SKHynix uMCP MCN
271-94865-0000(default)
Micron eMCP MCN 271-94866-0000

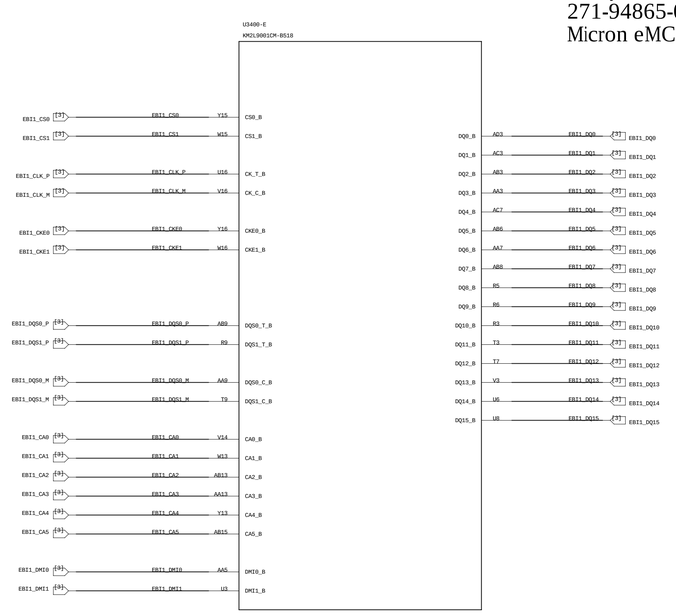

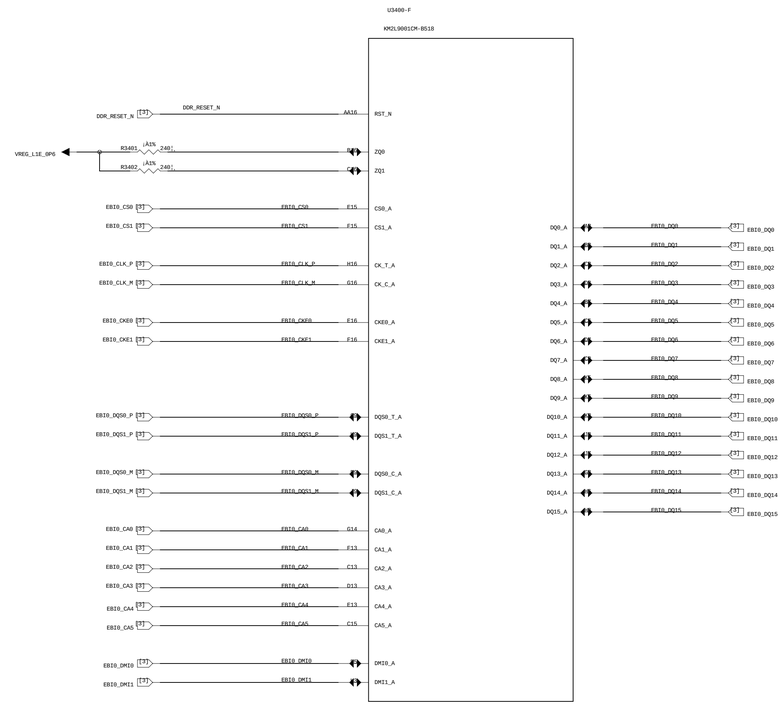

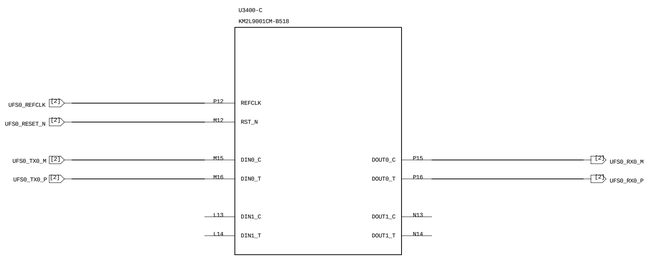

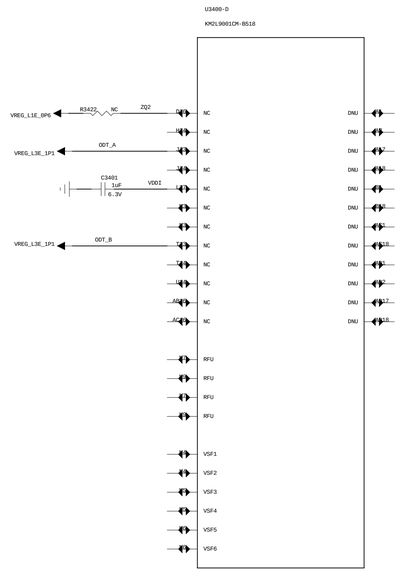

DRAWN: hongxuan.wei	DATED: 20210723	COMPANY: TINNO MOBILE TECHNOLOGY CO.LTD	
CHECKED: <Checked By>	DATED: <Checked Date>	TITLE: P652A_MAIN	
QUALITY CONTROL: <QC By>	DATED: <QC Date>	CODE: P652A / SIZE: D / DRAWING NO: P652A	REV: V0.1
RELEASED: <Released By>	DATED: <Release Date>	SCALE: <Scale>	SHEET: 22 OF 59

REVISION RECORD			
LTR	ECO NO:	APPROVED:	DATE:

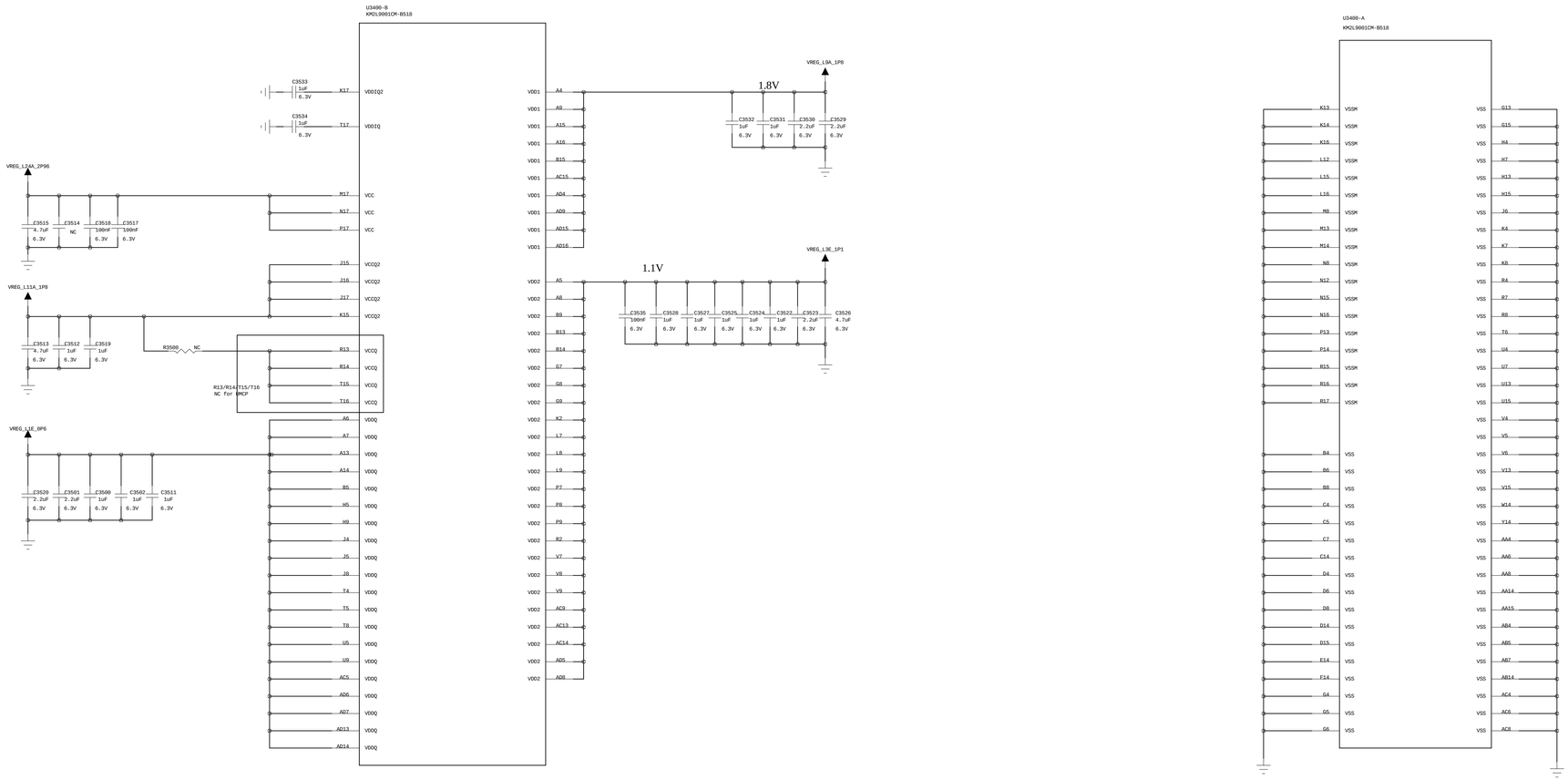

DRAWN: hongxuan.wei	DATED: 20210723	COMPANY: TINNO MOBILE TECHNOLOGY CO.LTD	
CHECKED: <Checked By>	DATED: <Checked Date>	TITLE: P652A_MAIN	
QUALITY CONTROL: <QC By>	DATED: <QC Date>	CODE: P652A / SIZE: D / DRAWING NO: P652A	REV: V0.1
RELEASED: <Released By>	DATED: <Release Date>	SCALE: <Scale>	SHEET: 23 OF 59

REVISION RECORD			
LTR	ECO NO:	APPROVED:	DATE:

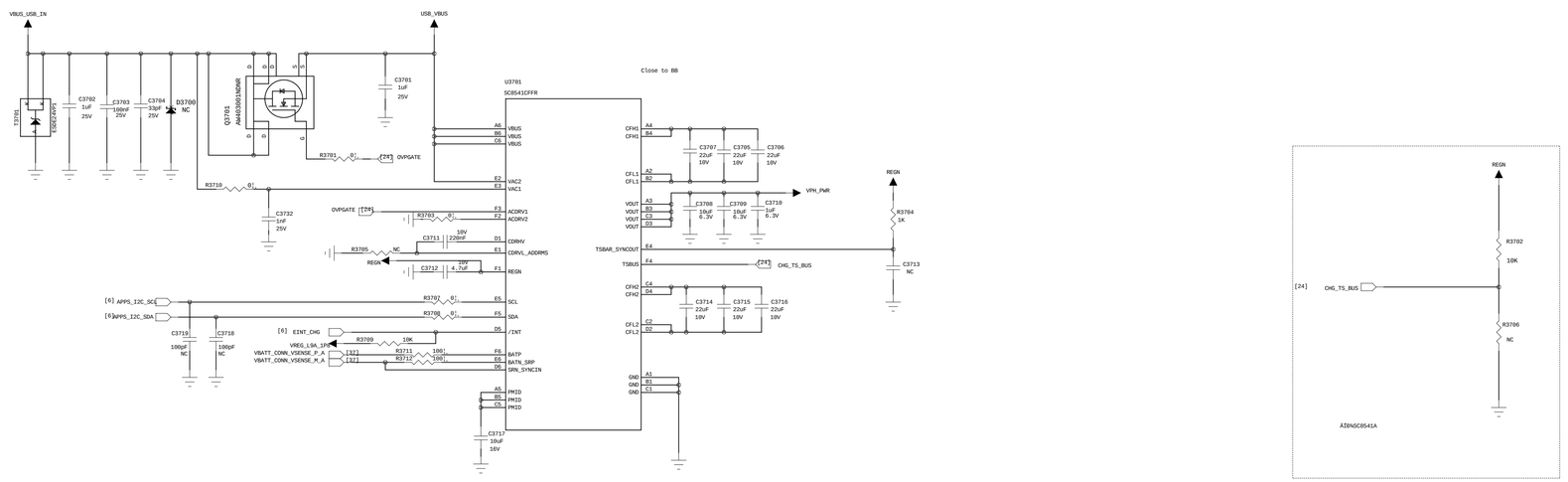

DRAWN: hongxuan.wei	DATED: 20210723
CHECKED: <Checked By>	DATED: <Checked Date>
QUALITY CONTROL: <QC By>	DATED: <QC Date>
RELEASED: <Released By>	DATED: <Release Date>

COMPANY: TINNO MOBILE TECHNOLOGY CO.LTD			
TITLE: P652A_MAIN			
CODE: P652A	SIZE: D	DRAWING NO: P652A	REV: V0.1
SCALE: <Scale>		SHEET: 24 OF 59	

REVISION RECORD			
LTR	ECO NO:	APPROVED:	DATE:

Sub Mic

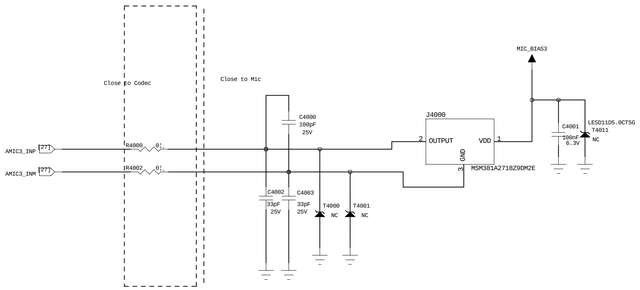

Headset Mic

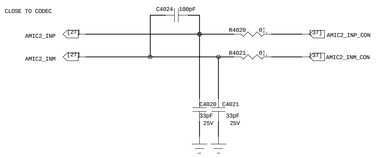

Main Mic

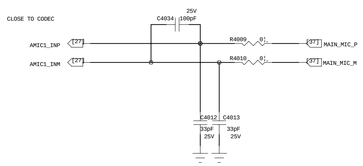

HAC T-Coil PA

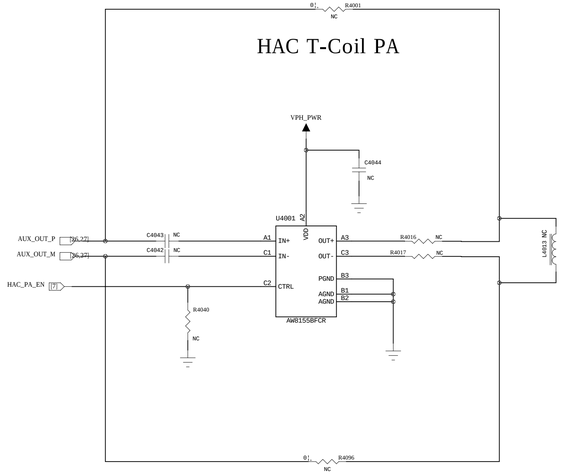

Handset Receiver

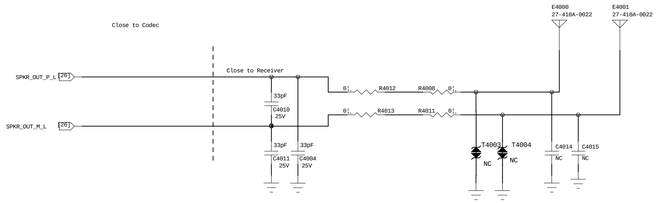

DRAWN: hongxuan.wei	DATED: 20210723
CHECKED: <Checked By>	DATED: <Checked Date>
QUALITY CONTROL: <QC By>	DATED: <QC Date>
RELEASED: <Released By>	DATED: <Release Date>

COMPANY: TINNO MOBILE TECHNOLOGY CO.LTD			
TITLE: P652A_MAIN			
CODE: P652A	SIZE: D	DRAWING NO: P652A	REV: V0.1
SCALE: <Scale>		SHEET: 23 OF 59	

REVISION RECORD			
LTR	ECO NO:	APPROVED:	DATE:

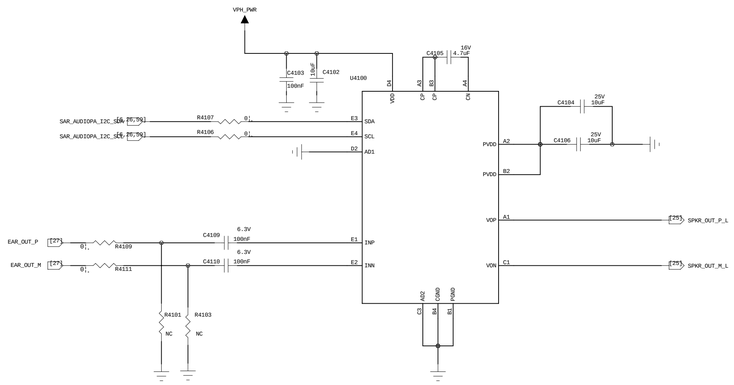

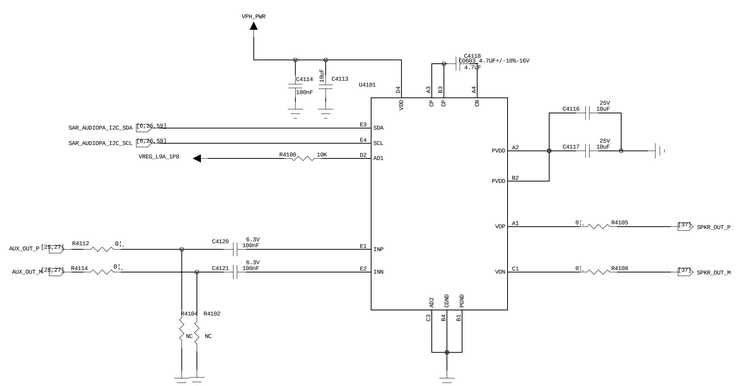

COMPANY: TINNO MOBILE TECHNOLOGY CO.LTD			
TITLE: P652A_MAIN			
DRAWN: hongxuan.wei	DATED: 20210723		
CHECKED: <Checked By>	DATED: <Checked Date>		
QUALITY CONTROL: <QC By>	DATED: <QC Date>		
RELEASED: <Released By>	DATED: <Release Date>		
CODE: P652A	SIZE: D	DRAWING NO: P652A	REV: V0.1
SCALE: <Scale>		SHEET: 26 OF 59	

REVISION RECORD			
LTR	ECO NO:	APPROVED:	DATE:

U4200

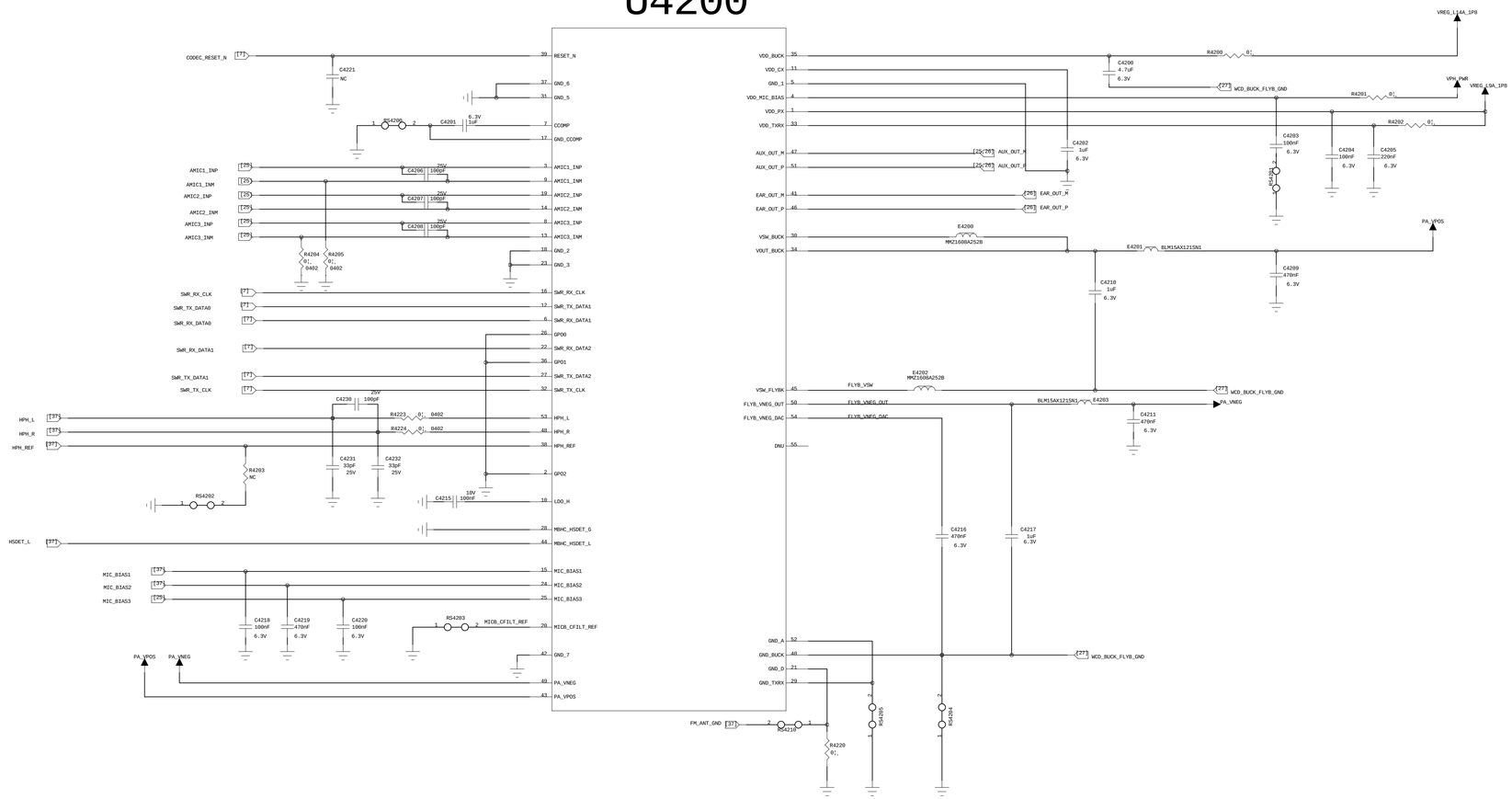

COMPANY: TINNO MOBILE TECHNOLOGY CO.LTD			
TITLE: P652A_MAIN			
DRAWN: hongxuan.wei	DATED: 20210723		
CHECKED: <Checked By>	DATED: <Checked Date>		
QUALITY CONTROL: <QC By>	DATED: <QC Date>		
RELEASED: <Released By>	DATED: <Release Date>		
CODE: P652A	SIZE: D	DRAWING NO: P652A	REV: V0.1
SCALE: <Scale>	SHEET: 27 OF 59		

REVISION RECORD			
LTR	ECO NO:	APPROVED:	DATE:

A+G Sensor

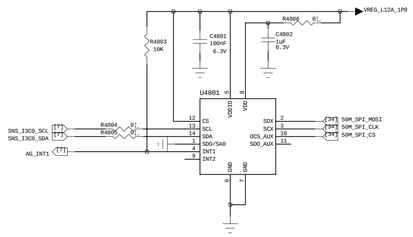

E-Compass

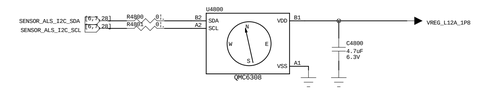

PL Sensor

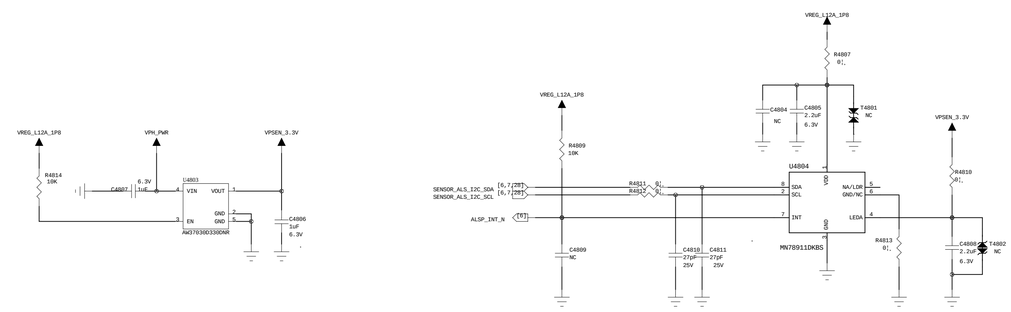

DRAWN: hongxuan.wei	DATED: 20210723	COMPANY: TINNO MOBILE TECHNOLOGY CO.LTD	
CHECKED: <Checked By>	DATED: <Checked Date>	TITLE: P652A_MAIN	
QUALITY CONTROL: <QC By>	DATED: <QC Date>	CODE: P652A / SIZE: D / DRAWING NO: P652A	REV: V0.1
RELEASED: <Released By>	DATED: <Release Date>	SCALE: <Scale>	SHEET: 28 OF 59

REVISION RECORD			
LTR	ECO NO:	APPROVED:	DATE:

	NO NFC	NFC
R4901	0;	NC
R4906	0;	NC

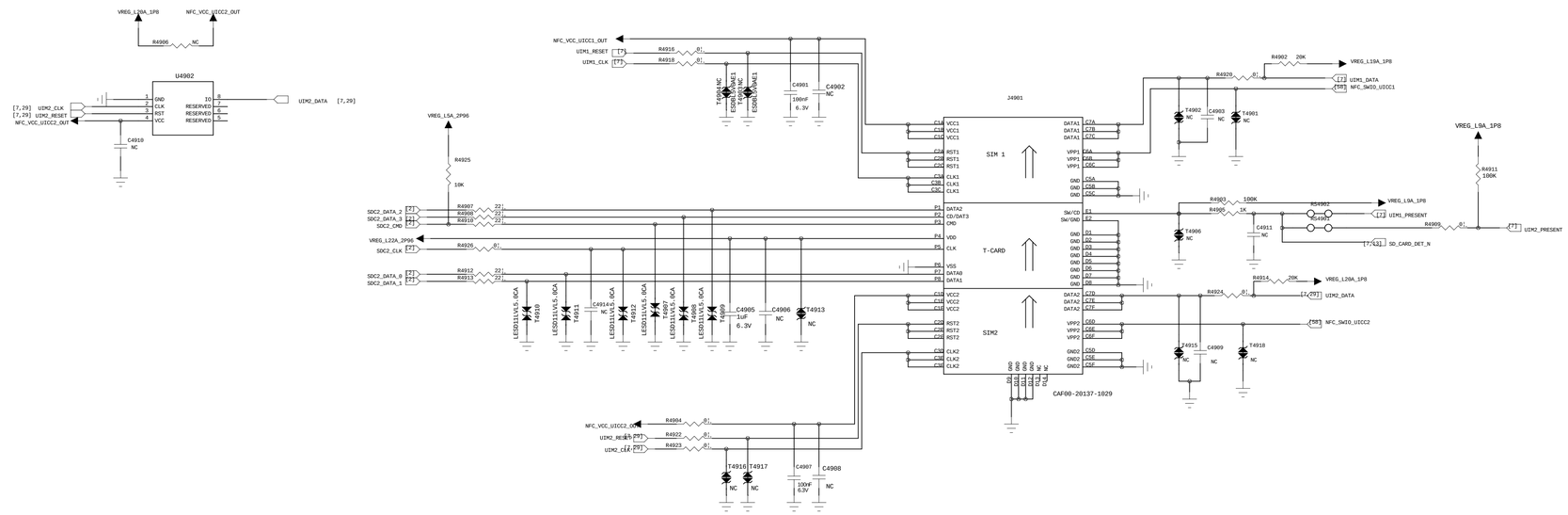

COMPANY: TINNO MOBILE TECHNOLOGY CO.LTD			
TITLE: P652A_MAIN			
DRAWN: hongxuan.wei	DATED: 20210723		
CHECKED: <Checked By>	DATED: <Checked Date>		
QUALITY CONTROL: <QC By>	DATED: <QC Date>		
RELEASED: <Released By>	DATED: <Release Date>		
CODE: P652A	SIZE: D	DRAWING NO: P652A	REV: V0.1
SCALE: <Scale>		SHEET: 29 OF 59	

REVISION RECORD			
LTR	ECO NO:	APPROVED:	DATE:

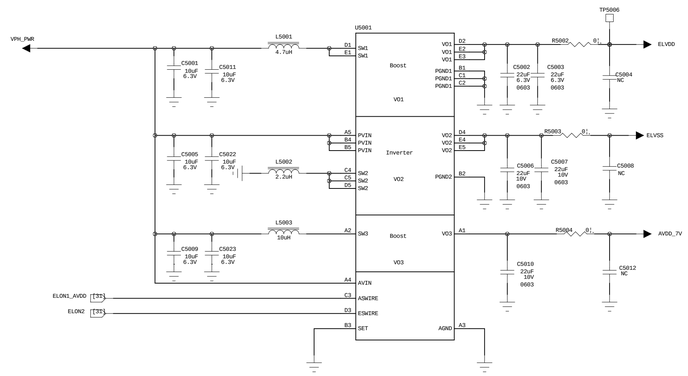

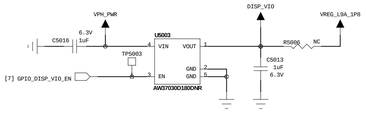

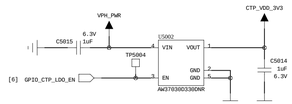

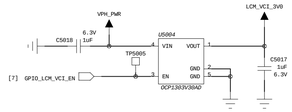

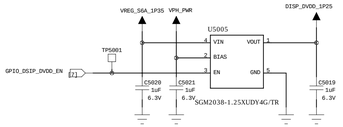

COMPANY: TINNO MOBILE TECHNOLOGY CO.LTD			
TITLE: P652A_MAIN			
DRAWN: hongxuan.wei	DATED: 20210723		
CHECKED: <Checked By>	DATED: <Checked Date>		
QUALITY CONTROL: <QC By>	DATED: <QC Date>		
RELEASED: <Released By>	DATED: <Release Date>		
CODE: P652A	SIZE: D	DRAWING NO: P652A	REV: V0.1
SCALE: <Scale>		SHEET: 30 of 59	

REVISION RECORD			
LTR	ECO NO:	APPROVED:	DATE:

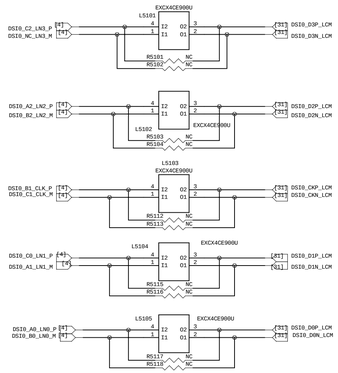

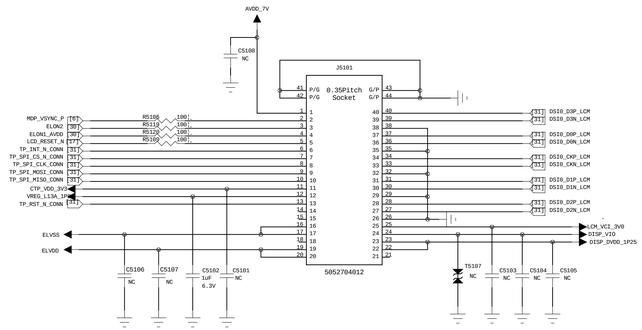

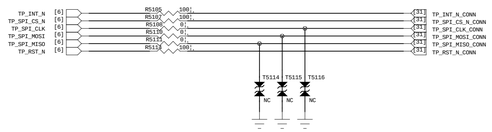

COMPANY: TINNO MOBILE TECHNOLOGY CO.LTD			
TITLE: P652A_MAIN			
CODE: P652A	SIZE: D	DRAWING NO: P652A	REV: V0.1
SCALE: <Scale>		SHEET: 31 OF 59	
DRAWN: hongxuan.wei	DATED: 20210723		
CHECKED: <Checked By>	DATED: <Checked Date>		
QUALITY CONTROL: <QC By>	DATED: <QC Date>		
RELEASED: <Released By>	DATED: <Release Date>		

REVISION RECORD			
LTR	ECO NO:	APPROVED:	DATE:

50M CAM AFVDD 3.3V

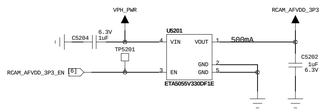

CAM IOVDD 1.8V

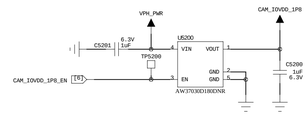

8M Wide CAM AVDD 2.8V

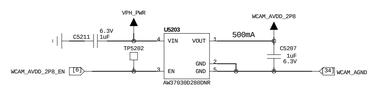

50M CAM AVDD 2.8V

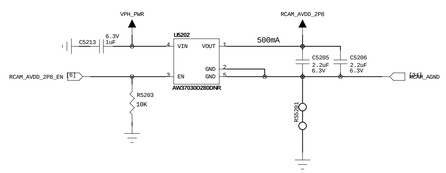

8M WIDE CAM DVDD 1.2V

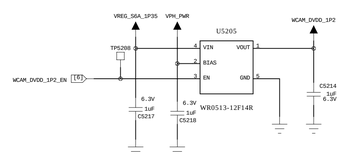

50M CAM DVDD 1.05V

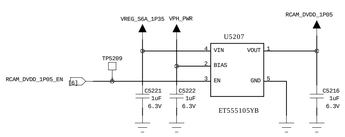

8M Wide CAM AFVDD 2.8V

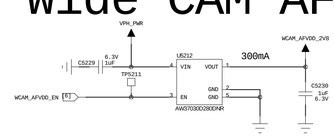

50M_OIS_VDD

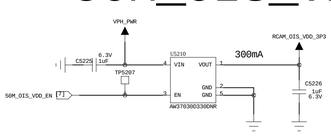

Front CAM AVDD 2.8V

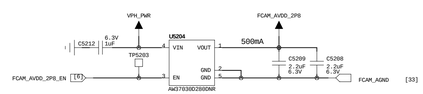

Front CAM DVDD 1.2V

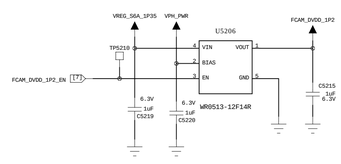

Rear LED Spring

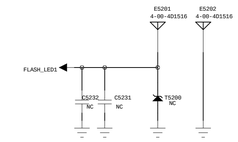

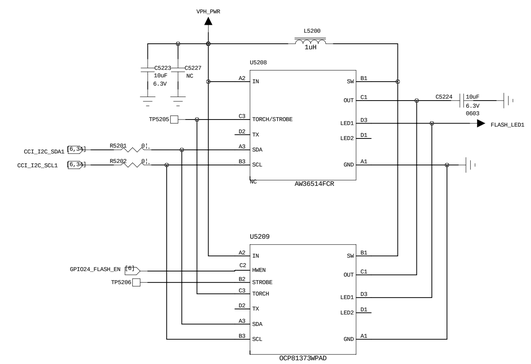

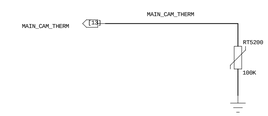

Rear LED BOARD

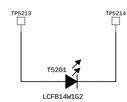

DRAWN: hongxuan.wei	DATED: 20210723	COMPANY: TINNO MOBILE TECHNOLOGY CO.LTD		
CHECKED: <Checked By>	DATED: <Checked Date>	TITLE: P652A_MAIN		
QUALITY CONTROL: <QC By>	DATED: <QC Date>	CODE: P652A	SIZE: D	DRAWING NO: P652A / REV: V0.1
RELEASED: <Released By>	DATED: <Release Date>	SCALE: <Scale>		SHEET: 32 OF 59

REVISION RECORD			
LTR	ECO NO:	APPROVED:	DATE:

Front-CAMERA

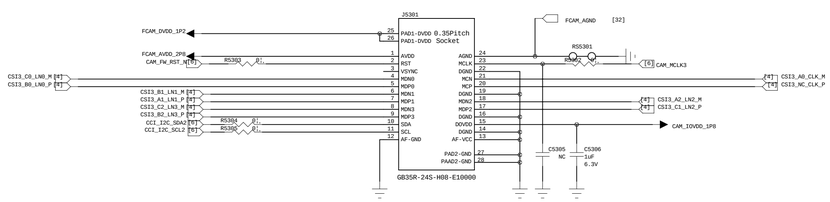

DRAWN: hongxuan.wei	DATED: 20210723	COMPANY: TINNO MOBILE TECHNOLOGY CO.LTD	
CHECKED: <Checked By>	DATED: <Checked Date>	TITLE: P652A_MAIN	
QUALITY CONTROL: <QC By>	DATED: <QC Date>	CODE: P652A / SIZE: D / DRAWING NO: P652A	REV: V0.1
RELEASED: <Released By>	DATED: <Release Date>	SCALE: <Scale>	SHEET: 33 OF 59

Main-CAMERA

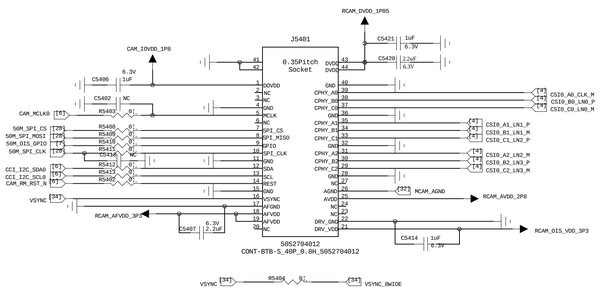

Wide-CAMERA

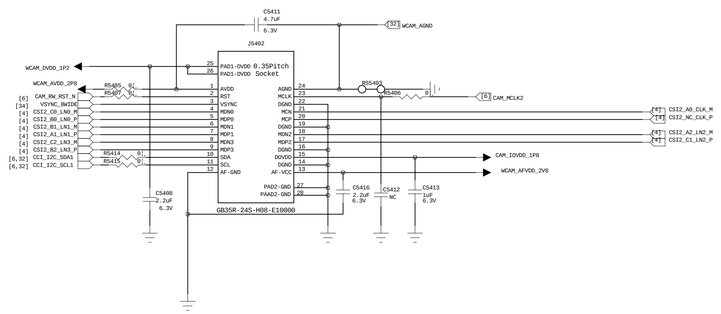

REVISION RECORD			
LTR	ECO NO:	APPROVED:	DATE:

DRAWN: hongxuan.wei	DATED: 20210723	COMPANY: TINNO MOBILE TECHNOLOGY CO.LTD		
CHECKED: <Checked By>	DATED: <Checked Date>	TITLE: P652A_MAIN		
QUALITY CONTROL: <QC By>	DATED: <QC Date>	CODE: P652A	SIZE: D	DRAWING NO: P652A / REV: V0.1
RELEASED: <Released By>	DATED: <Release Date>	SCALE: <Scale>	SHEET: 34 OF 59	

REVISION RECORD			
LTR	ECO NO:	APPROVED:	DATE:

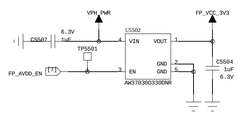

DRAWN: hongxuan.wei	DATED: 20210723
CHECKED: <Checked By>	DATED: <Checked Date>
QUALITY CONTROL: <QC By>	DATED: <QC Date>
RELEASED: <Released By>	DATED: <Release Date>

COMPANY: TINNO MOBILE TECHNOLOGY CO.LTD			
TITLE: P652A_MAIN			
CODE: P652A	SIZE: D	DRAWING NO: P652A	REV: V0.1
SCALE: <Scale>		SHEET: 35 OF 59	

REVISION RECORD			
LTR	ECO NO:	APPROVED:	DATE:

KEY

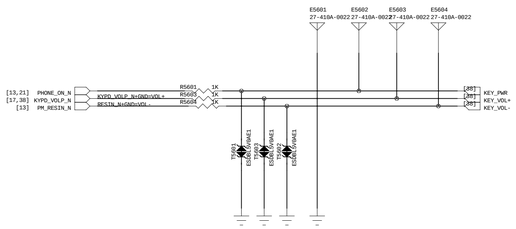

HW ID1

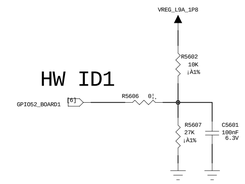

HW ID2

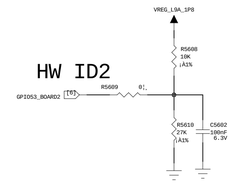

DRAWN: hongxuan.wei	DATED: 20210723	COMPANY: TINNO MOBILE TECHNOLOGY CO.LTD
CHECKED: <Checked By>	DATED: <Checked Date>	TITLE: P652A_MAIN
QUALITY CONTROL: <QC By>	DATED: <QC Date>	CODE: P652A / SIZE: D / DRAWING NO: P652A / REV: V0.1
RELEASED: <Released By>	DATED: <Release Date>	SCALE: <Scale> / SHEET: 36 OF 59

REVISION RECORD			
LTR	ECO NO:	APPROVED:	DATE:

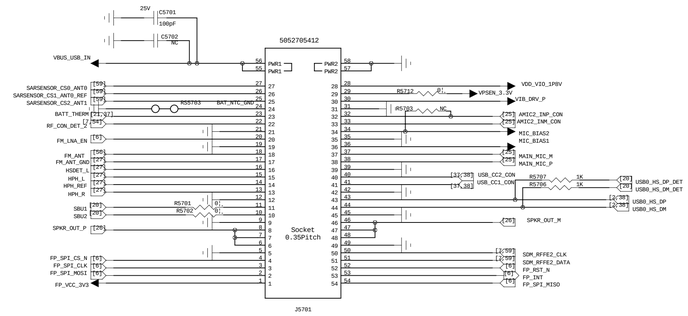

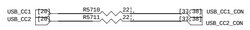

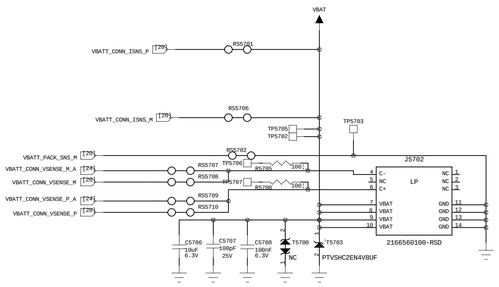

DRAWN: hongxuan.wei	DATED: 20210723	COMPANY: TINNO MOBILE TECHNOLOGY CO.LTD	
CHECKED: <Checked By>	DATED: <Checked Date>	TITLE: P652A_MAIN	
QUALITY CONTROL: <QC By>	DATED: <QC Date>	CODE: P652A / SIZE: D / DRAWING NO: P652A	REV: V0.1
RELEASED: <Released By>	DATED: <Release Date>	SCALE: <Scale>	SHEET: 37 OF 59

REVISION RECORD			
LTR	ECO NO:	APPROVED:	DATE:

Debug Test Point

RAM dump

UART

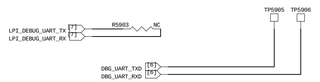

Fixture Test Point

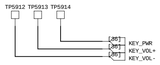

FORCED_USB BOOT

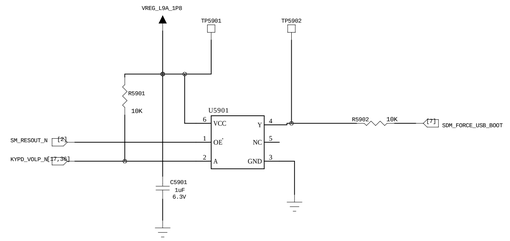

USB

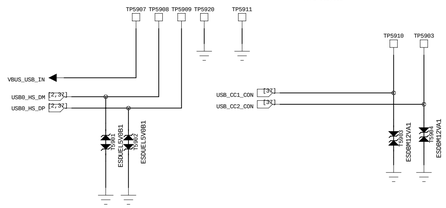

TYPE_CC1,CC2

Mark

shielding can

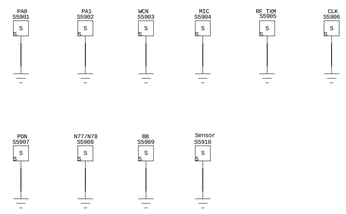

Metal Grounding

Bottom

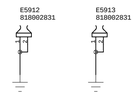

DRAWN: hongxuan.wei	DATED: 20210723	COMPANY: TINNO MOBILE TECHNOLOGY CO.LTD	
CHECKED: <Checked By>	DATED: <Checked Date>	TITLE: P652A_MAIN	
QUALITY CONTROL: <QC By>	DATED: <QC Date>	CODE: P652A / SIZE: D / DRAWING NO: P652A	REV: V0.1
RELEASED: <Released By>	DATED: <Release Date>	SCALE: <Scale>	SHEET: 38 OF 59

REVISION RECORD			
LTR	ECO NO:	APPROVED:	DATE:

U6000-B

IC-RF_6.0X5.0X0.6_SDR-735

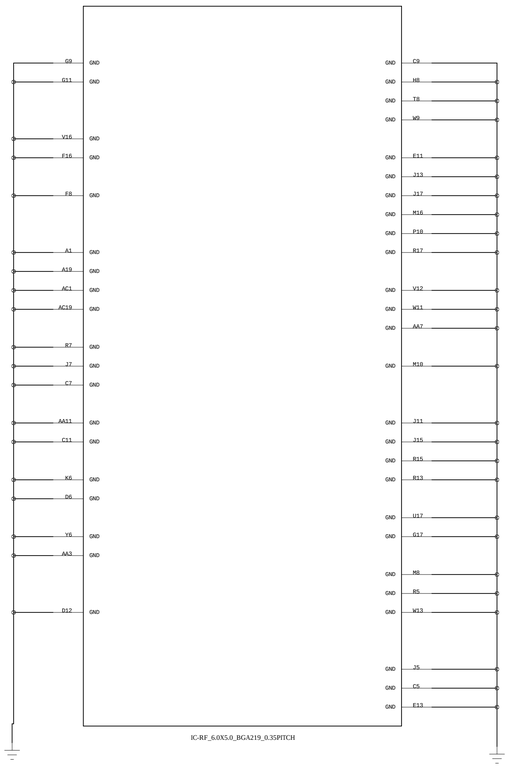

U6000-A

IC-RF_6.0X5.0X0.6_SDR-735

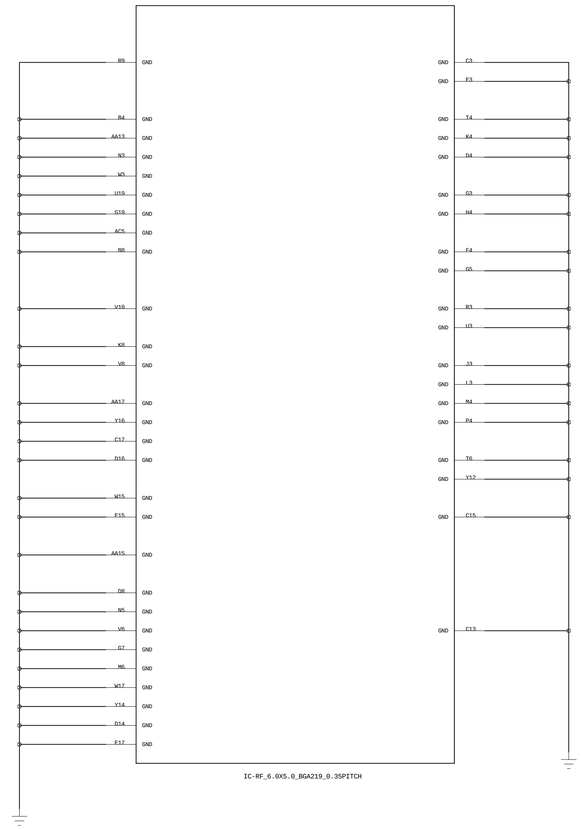

DRAWN: hongxuan.wei	DATED: 20210723
CHECKED: <Checked By>	DATED: <Checked Date>
QUALITY CONTROL: <QC By>	DATED: <QC Date>
RELEASED: <Released By>	DATED: <Release Date>

COMPANY: TINNO MOBILE TECHNOLOGY CO.LTD			
TITLE: P652A_MAIN			
CODE: P652A	SIZE: D	DRAWING NO: P652A	REV: V0.1
SCALE: <Scale>		SHEET: 39 OF 59	

REVISION RECORD			
LTR	ECO NO:	APPROVED:	DATE:

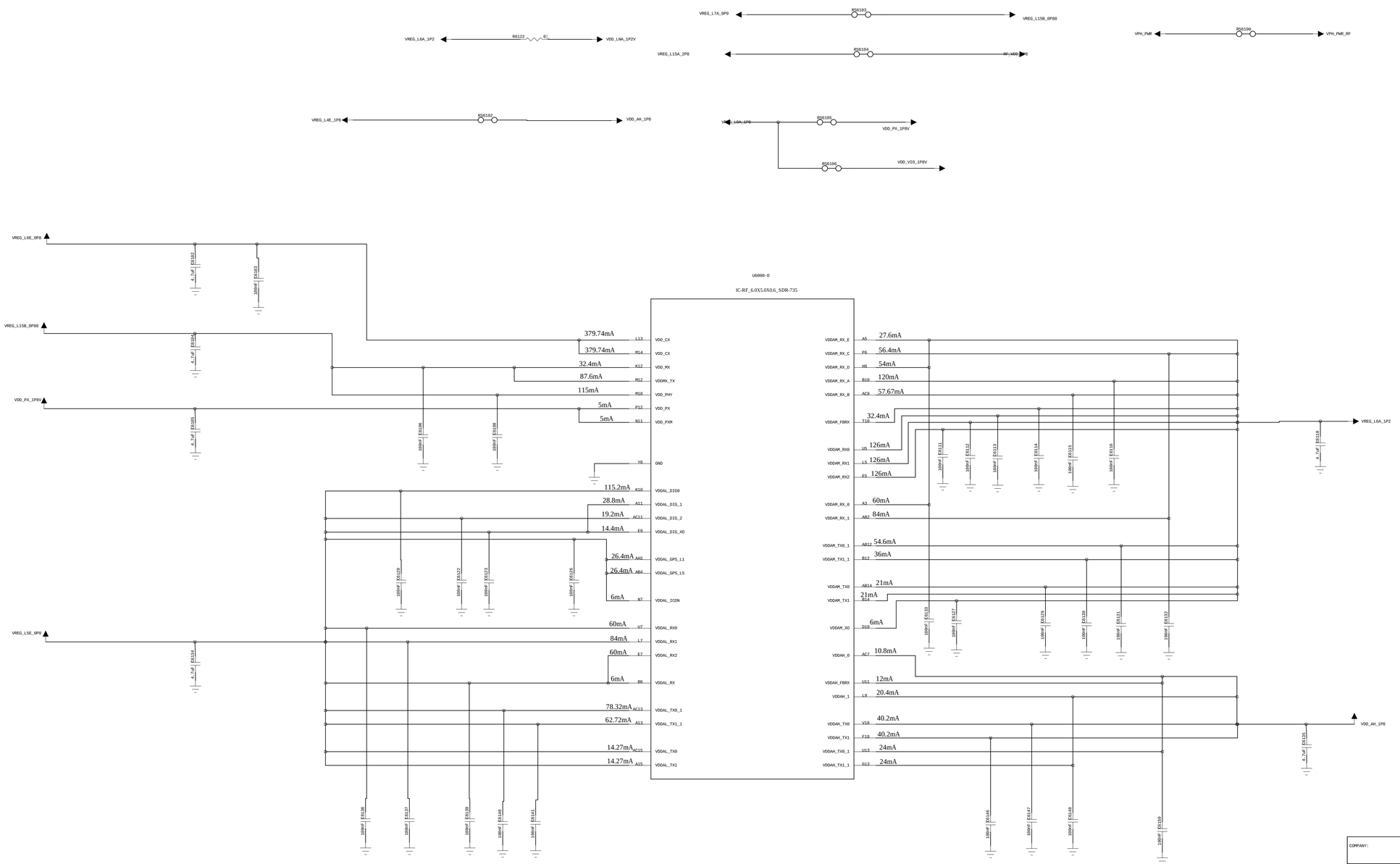

DRAWN: hongxuan.wei	DATED: 20210723	COMPANY: TINNO MOBILE TECHNOLOGY CO.LTD	
CHECKED: <Checked By>	DATED: <Checked Date>	TITLE: P652A_MAIN	
QUALITY CONTROL: <QC By>	DATED: <QC Date>	CODE: P652A / SIZE: D / DRAWING NO: P652A	REV: V0.1
RELEASED: <Released By>	DATED: <Release Date>	SCALE: <Scale>	SHEET: 40 OF 59

REVISION RECORD			
LTR	ECO NO:	APPROVED:	DATE:

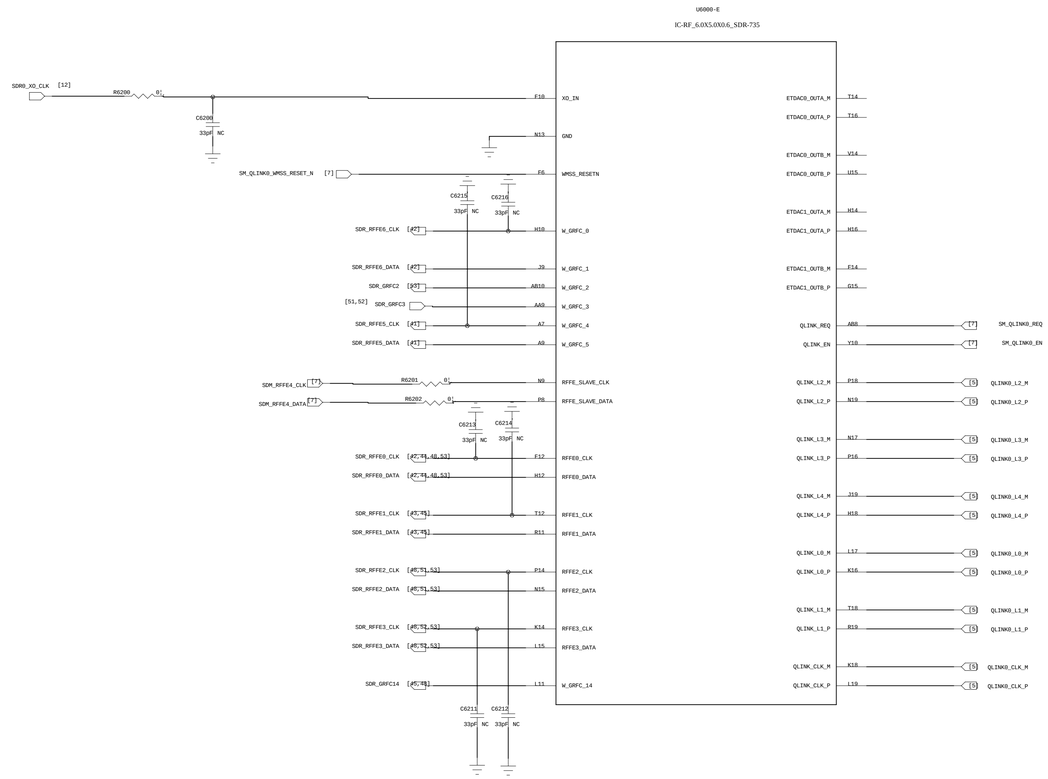

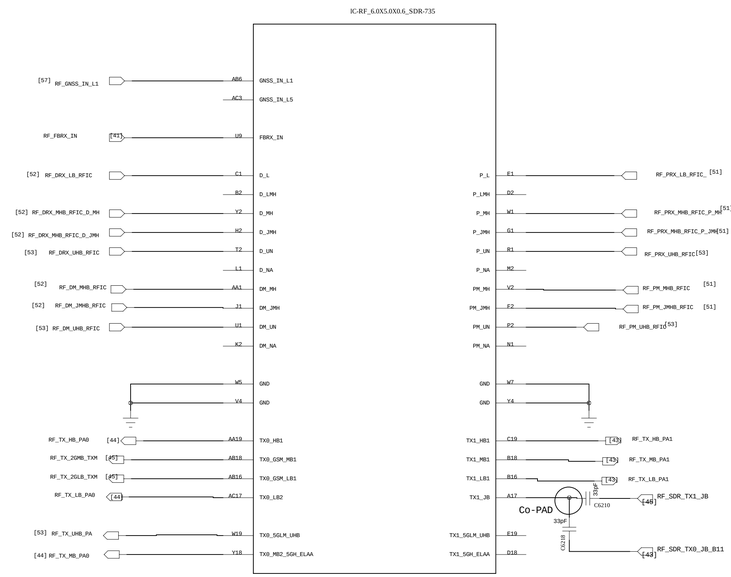

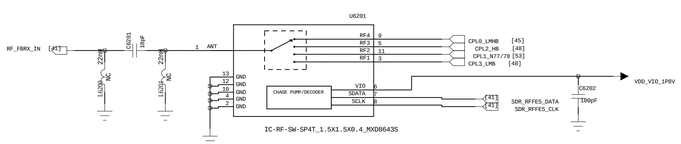

COMPANY: TINNO MOBILE TECHNOLOGY CO.LTD			
TITLE: P652A_MAIN			
DRAWN: hongxuan.wei	DATED: 20210723	CODE: P652A	SIZE: D
CHECKED: <Checked By>	DATED: <Checked Date>	DRAWING NO: P652A	REV: V0.1
QUALITY CONTROL: <QC By>	DATED: <QC Date>		
RELEASED: <Released By>	DATED: <Release Date>	SCALE: <Scale>	SHEET: 41 OF 59

REVISION RECORD			
LTR	ECO NO:	APPROVED:	DATE:

QET6105

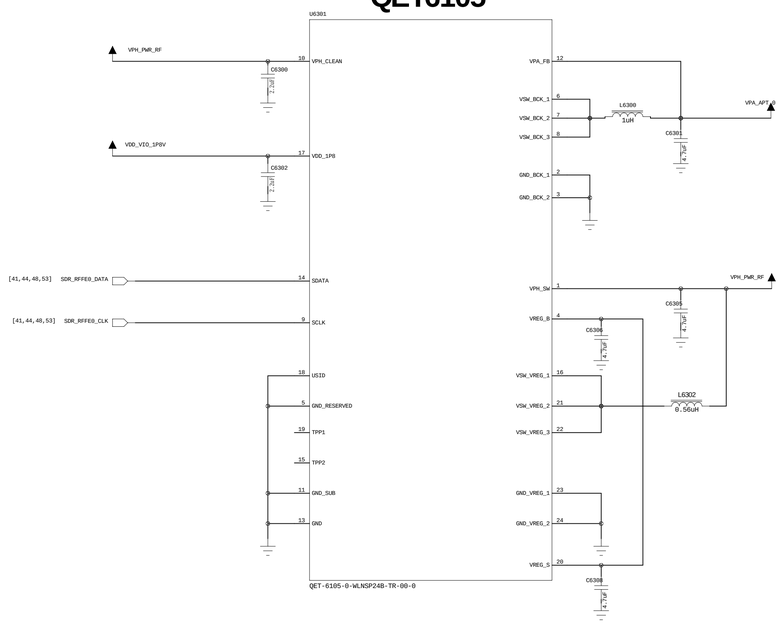

QET4101

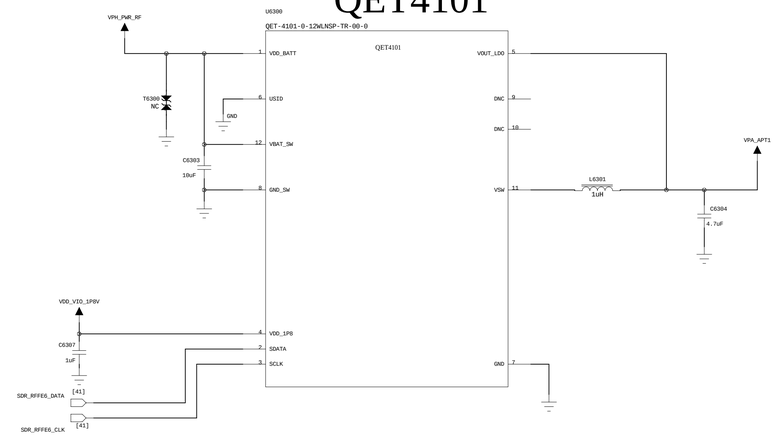

COMPANY: TINNO MOBILE TECHNOLOGY CO.LTD			
TITLE: P652A_MAIN			
DRAWN: hongxuan.wei	DATED: 20210723		
CHECKED: <Checked By>	DATED: <Checked Date>		
QUALITY CONTROL: <QC By>	DATED: <QC Date>		
RELEASED: <Released By>	DATED: <Release Date>		
CODE: P652A	SIZE: D	DRAWING NO: P652A	REV: V0.1
SCALE: <Scale>		SHEET: 42 OF 59	

REVISION RECORD			
LTR	ECO NO:	APPROVED:	DATE:

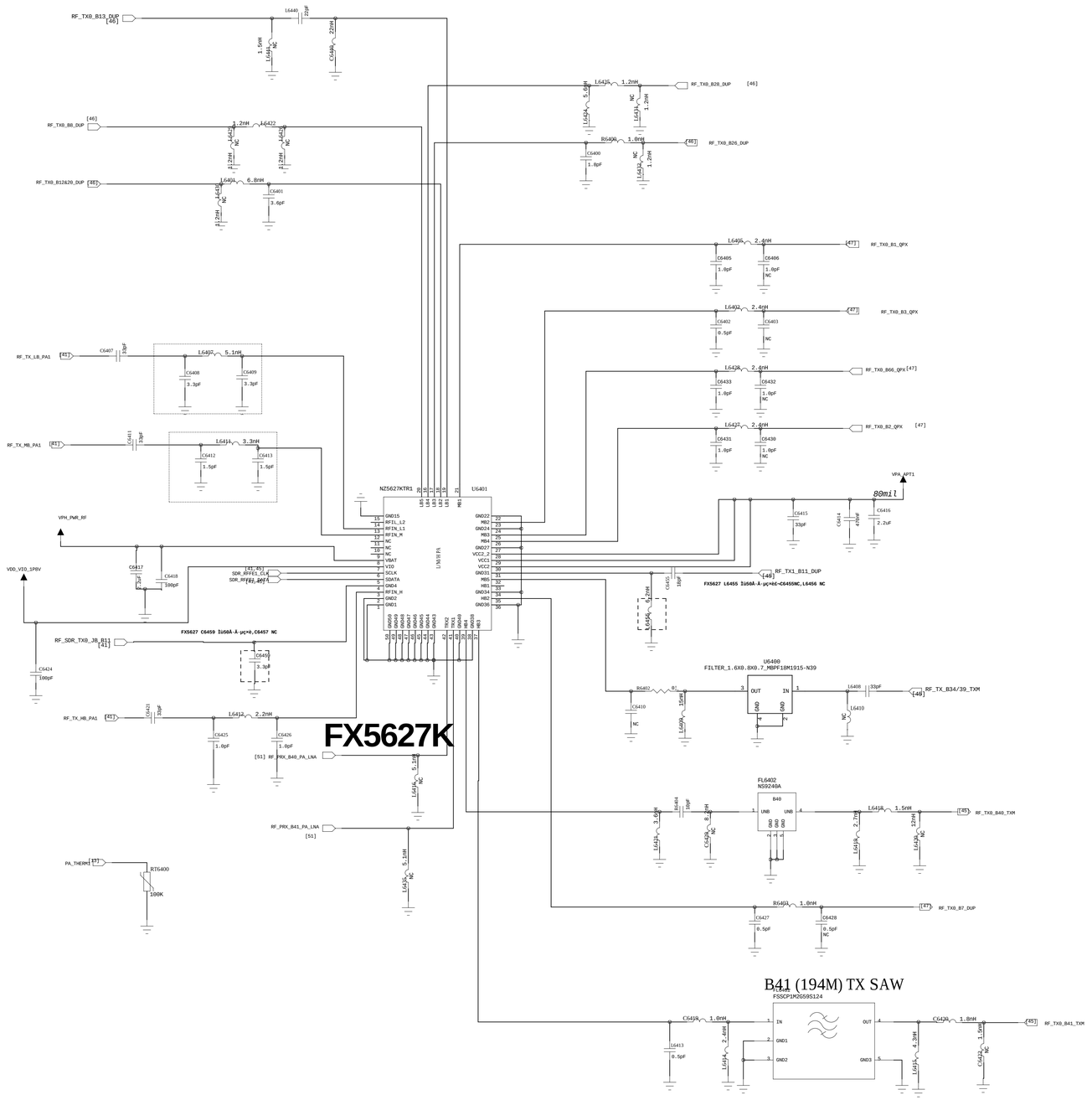

COMPANY: TINNO MOBILE TECHNOLOGY CO.LTD			
TITLE: P652A_MAIN			
DRAWN: hongxuan.wei	DATED: 20210723		
CHECKED: <Checked By>	DATED: <Checked Date>		
QUALITY CONTROL: <QC By>	DATED: <QC Date>		
RELEASED: <Released By>	DATED: <Release Date>		
CODE: P652A	SIZE: D	DRAWING NO: P652A	REV: V0.1
SCALE: <Scale>		SHEET: 43 OF 59	

REVISION RECORD			
LTR	ECO NO:	APPROVED:	DATE:

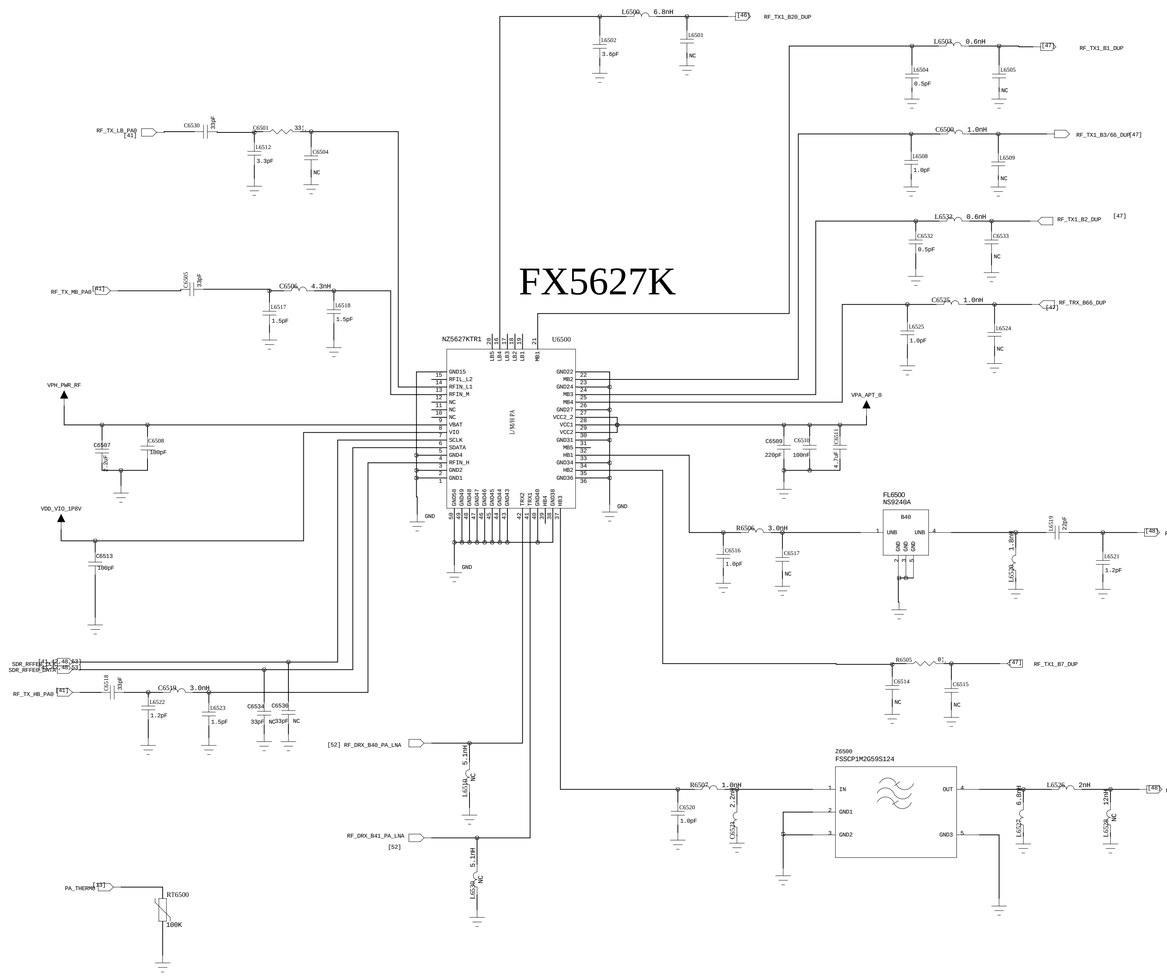

DRAWN: hongxuan.wei	DATED: 20210723	COMPANY: TINNO MOBILE TECHNOLOGY CO.LTD	
CHECKED: <Checked By>	DATED: <Checked Date>	TITLE: P652A_MAIN	
QUALITY CONTROL: <QC By>	DATED: <QC Date>	CODE: P652A / SIZE: D / DRAWING NO: P652A	REV: V0.1
RELEASED: <Released By>	DATED: <Release Date>	SCALE: <Scale>	SHEET: 44OF 59

REVISION RECORD			
LTR	ECO NO:	APPROVED:	DATE:

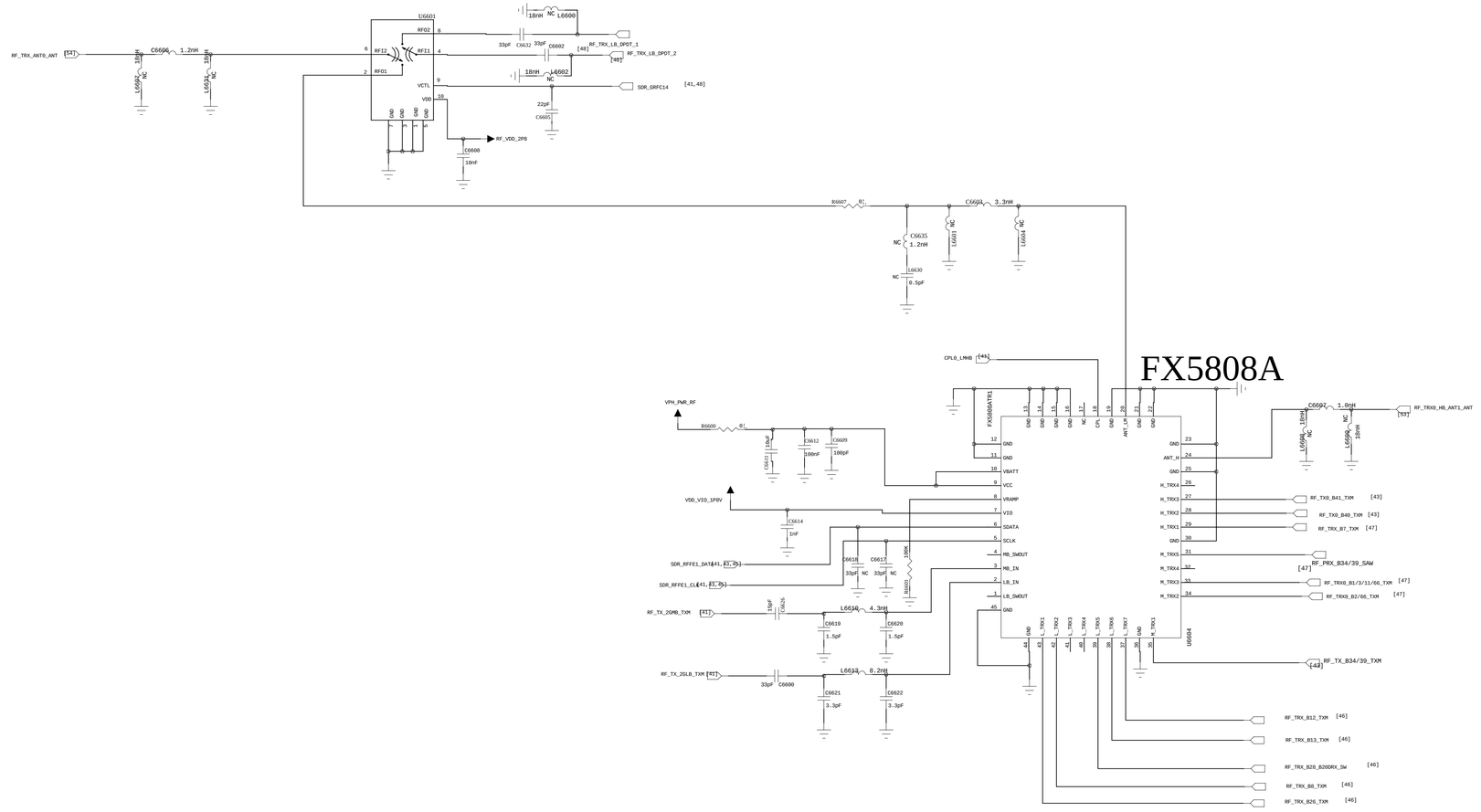

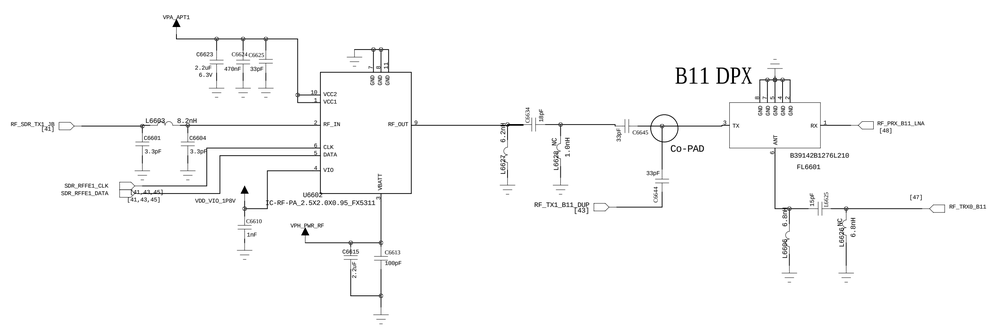

COMPANY: TINNO MOBILE TECHNOLOGY CO.LTD			
TITLE: P652A_MAIN			
DRAWN: hongxuan.wei	DATED: 20210723		
CHECKED: <Checked By>	DATED: <Checked Date>		
QUALITY CONTROL: <QC By>	DATED: <QC Date>		
RELEASED: <Released By>	DATED: <Release Date>		
CODE: P652A	SIZE: D	DRAWING NO: P652A	REV: V0.1
SCALE: <Scale>		SHEET: 45 OF 59	

REVISION RECORD			
LTR	ECO NO:	APPROVED:	DATE:

B12/20 DPX ANT0

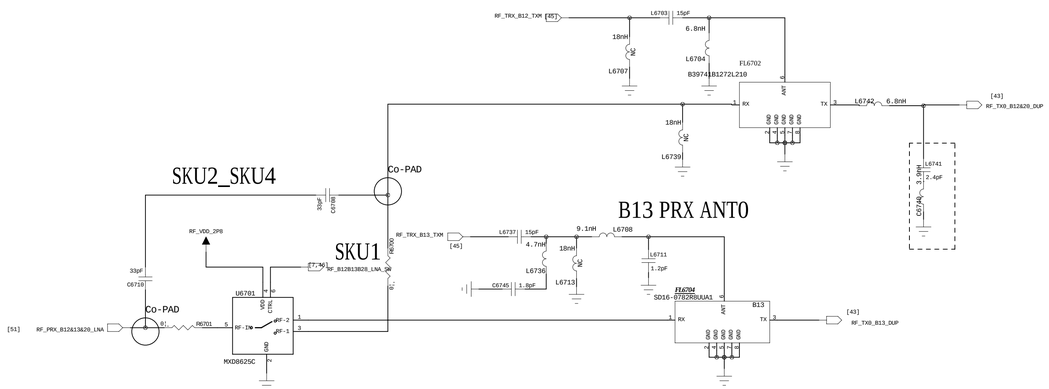

B8 PRX ANT0

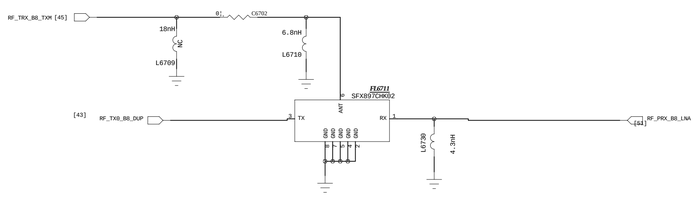

B26 PRX ANT0

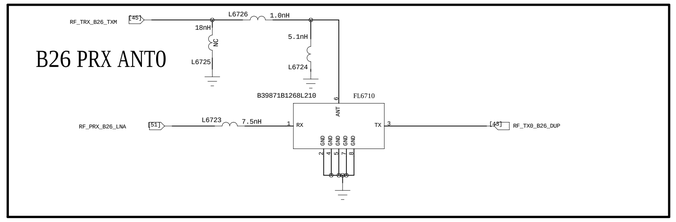

B20_TRX0 ANT4

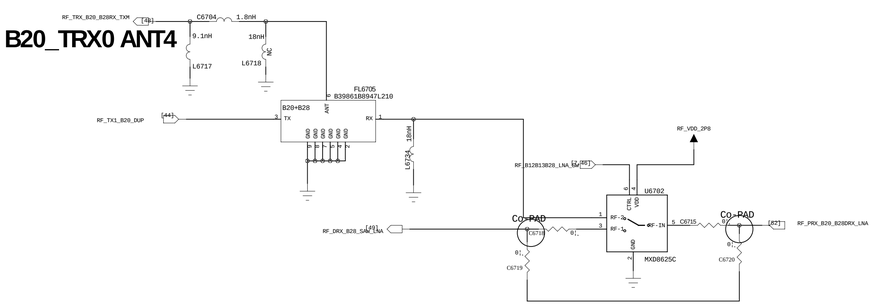

B28TRX/B20 DPX ANT0

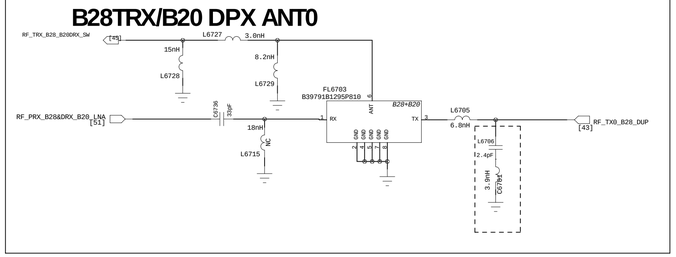

COMPANY: TINNO MOBILE TECHNOLOGY CO.LTD			
TITLE: P652A_MAIN			
DRAWN: hongxuan.wei	DATED: 20230723		
CHECKED: <Checked By>	DATED: <Checked Date>		
QUALITY CONTROL: <QC By>	DATED: <QC Date>		
RELEASED: <Released By>	DATED: <Release Date>		
CODE: P652A	SIZE: D	DRAWING NO: P652A	REV: V0.1
SCALE: <Scale>		SHEET: 46 OF 59	

REVISION RECORD			
LTR	ECO NO:	APPROVED:	DATE:

B1/3 TRX_ANT0

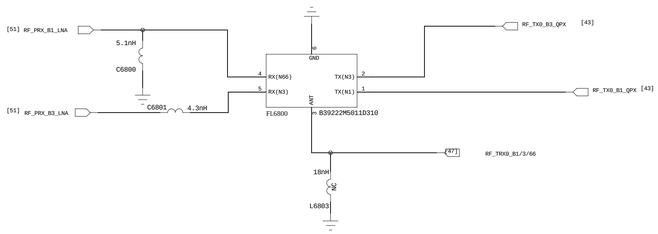

B2/66 TRX_ANT0

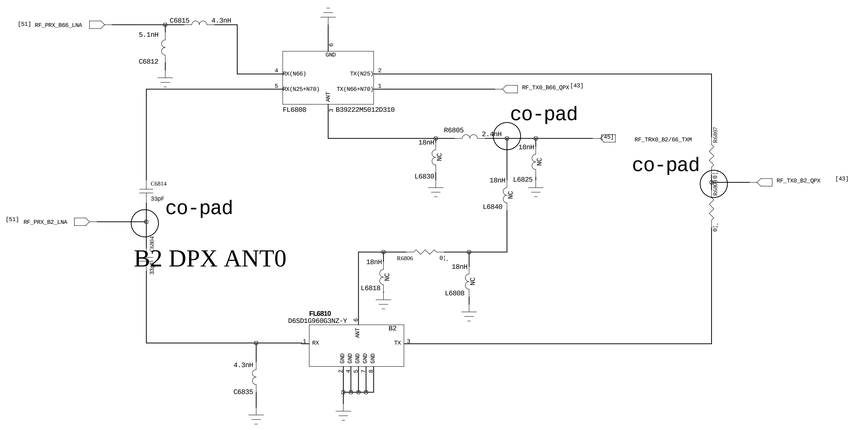

B1/3/66 TRX_ANT4

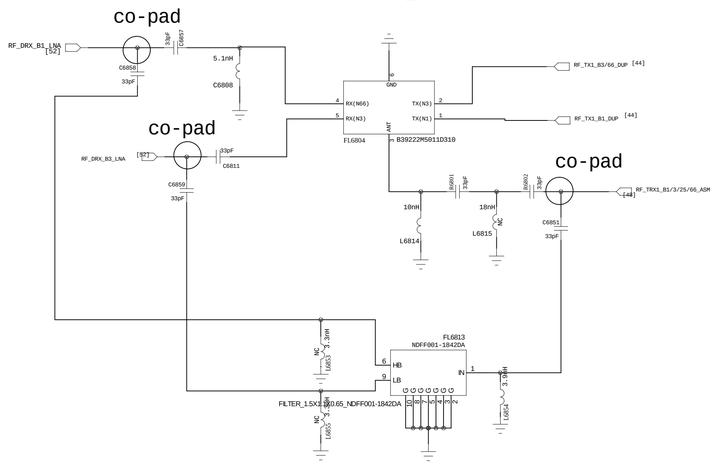

B7 DPX ANT0

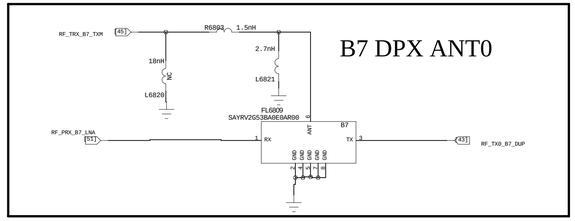

B7 DPX ANT4

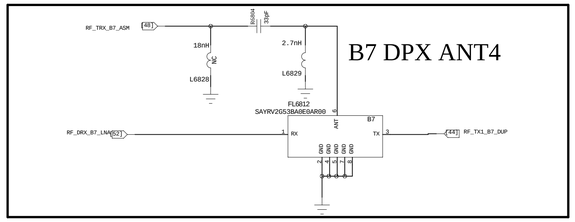

B2_TRX_ANT4

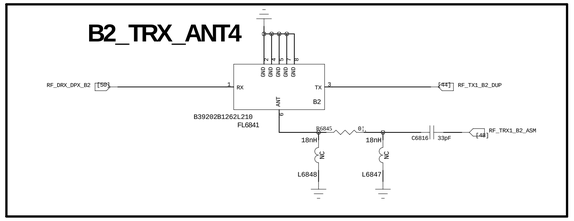

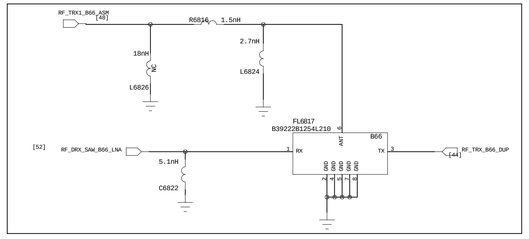

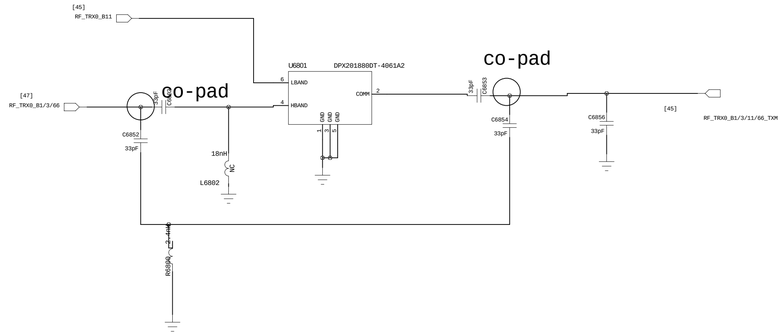

B34/39 PRX

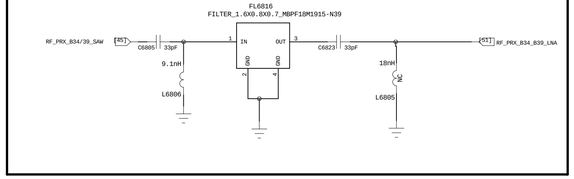

DRAWN: hongxuan.wei	DATED: 20210723	COMPANY: TINNO MOBILE TECHNOLOGY CO.LTD	
CHECKED: <Checked By>	DATED: <Checked Date>	TITLE: P652A_MAIN	
QUALITY CONTROL: <QC By>	DATED: <QC Date>	CODE: P652A / SIZE: D / DRAWING NO: P652A	REV: V0.1
RELEASED: <Released By>	DATED: <Release Date>	SCALE: <Scale>	SHEET: 47 OF 59

REIVISION RECORD			
LTR	ECO NO:	APPROVED:	DATE:

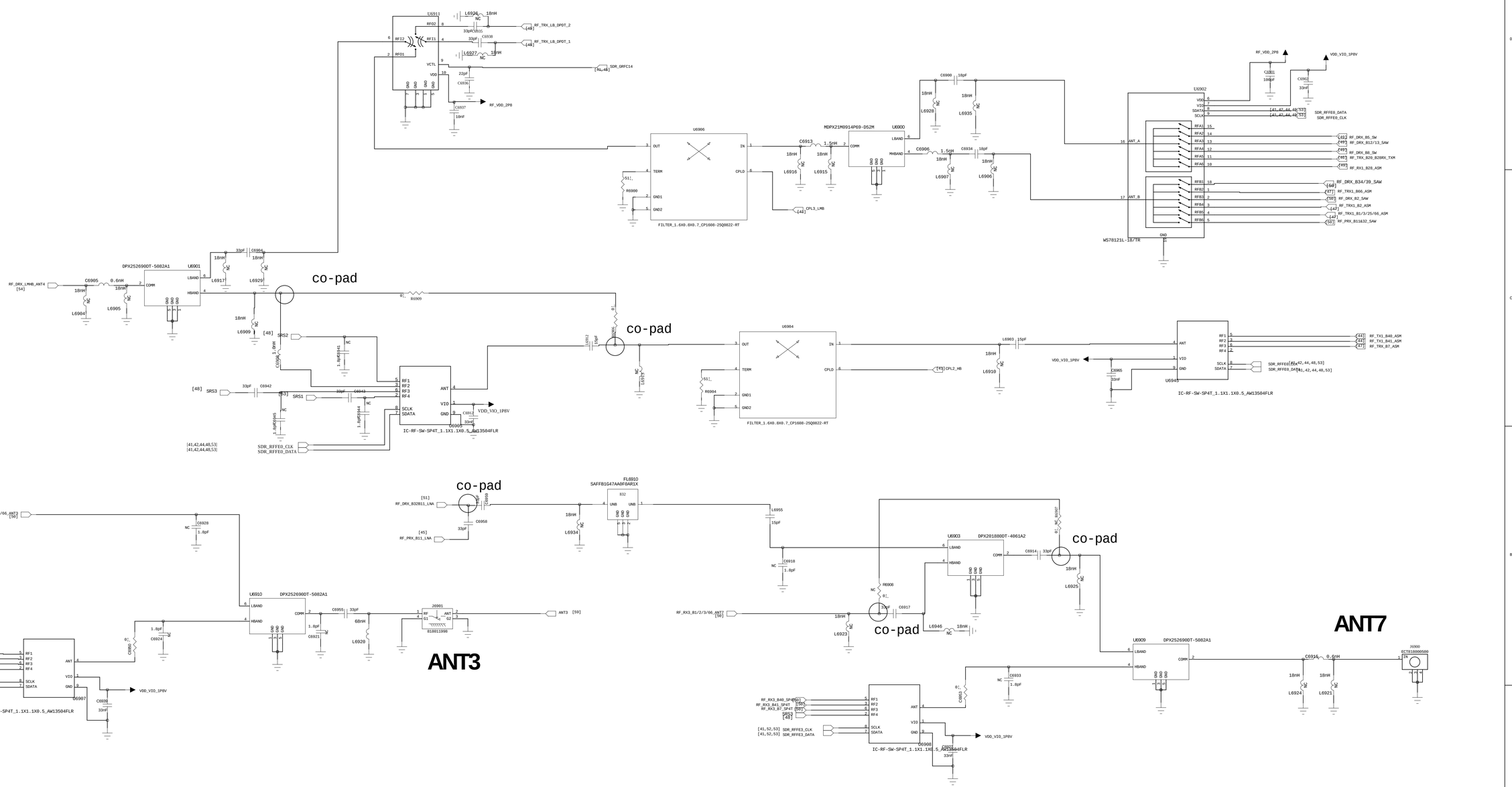

DRAWN: hongxuan.wei	DATED: 20210723	COMPANY: TINNO MOBILE TECHNOLOGY CO.LTD	
CHECKED: <Checked By>	DATED: <Checked Date>	TITLE: P652A_MAIN	
QUALITY CONTROL: <QC By>	DATED: <QC Date>	CODE: P652A / SIZE: D / DRAWING NO: P652A	REV: V0.1
RELEASED: <Released By>	DATED: <Release Date>	SCALE: <Scale>	SHEET: 48 OF 59

REVISION RECORD			
LTR	ECO NO:	APPROVED:	DATE:

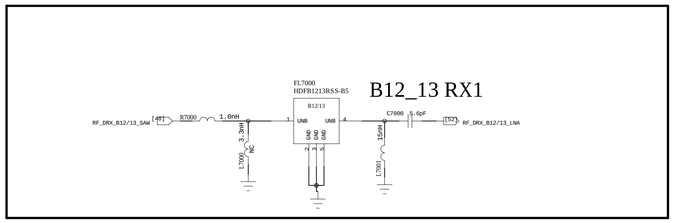

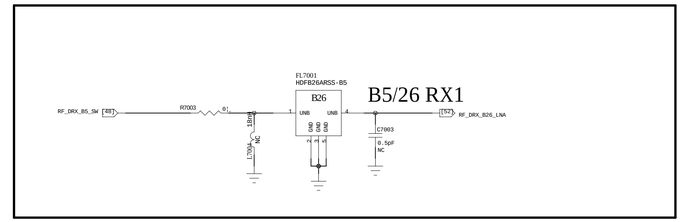

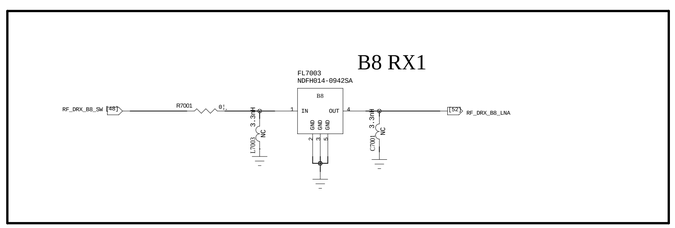

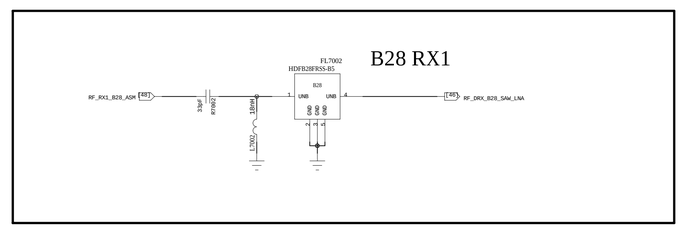

COMPANY: TINNO MOBILE TECHNOLOGY CO.LTD			
TITLE: P652A_MAIN			
DRAWN: hongxuan.wei	DATED: 20210723		
CHECKED: <Checked By>	DATED: <Checked Date>	CODE: P652A	SIZE: D
QUALITY CONTROL: <QC By>	DATED: <QC Date>	DRAWING NO: P652A	REV: V0.1
RELEASED: <Released By>	DATED: <Release Date>	SCALE: <Scale>	SHEET: 49 OF 59

REVISION RECORD			
LTR	ECO NO:	APPROVED:	DATE:

B34/39 DRX

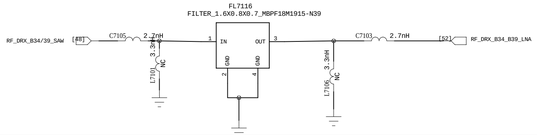

B2 RX1

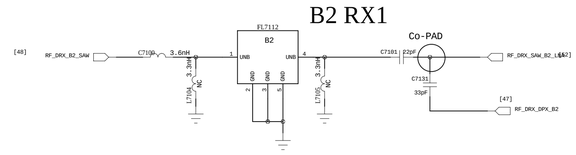

B1/2/3/66 RX2 Dual Saw

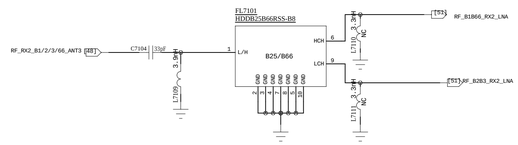

B11/32 RX1 ANT4

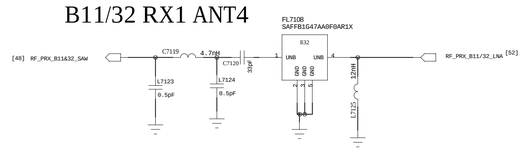

B41 Rx3

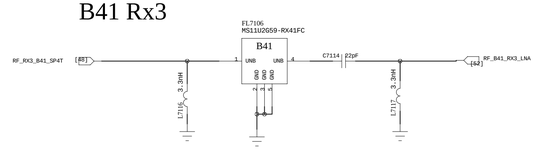

B7 Rx2

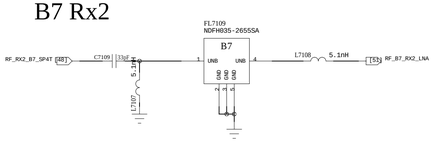

B1/2/3/66 RX3 Dual Saw

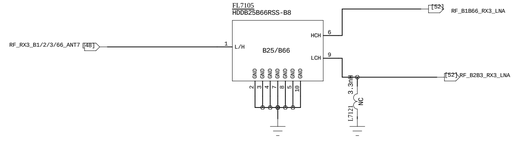

B40 Rx2

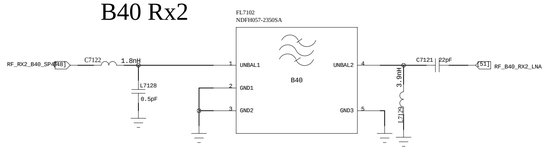

B7 Rx3

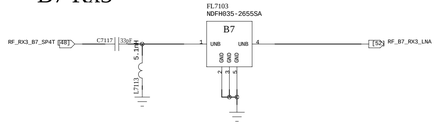

B41 Rx2

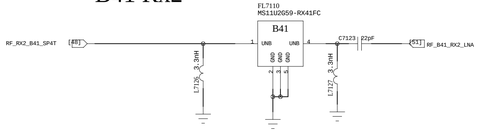

B40 Rx3

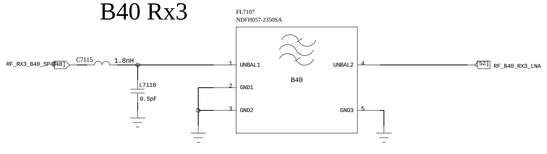

DRAWN: hongxuan.wei	DATED: 20210723	COMPANY: TINNO MOBILE TECHNOLOGY CO.LTD	
CHECKED: <Checked By>	DATED: <Checked Date>	TITLE: P652A_MAIN	
QUALITY CONTROL: <QC By>	DATED: <QC Date>	CODE: P652A / SIZE: D / DRAWING NO: P652A	REV: V0.1
RELEASED: <Released By>	DATED: <Release Date>	SCALE: <Scale>	SHEET: 50 OF 59

REVISION RECORD			
LTR	ECO NO:	APPROVED:	DATE:

QLN5030 U7202

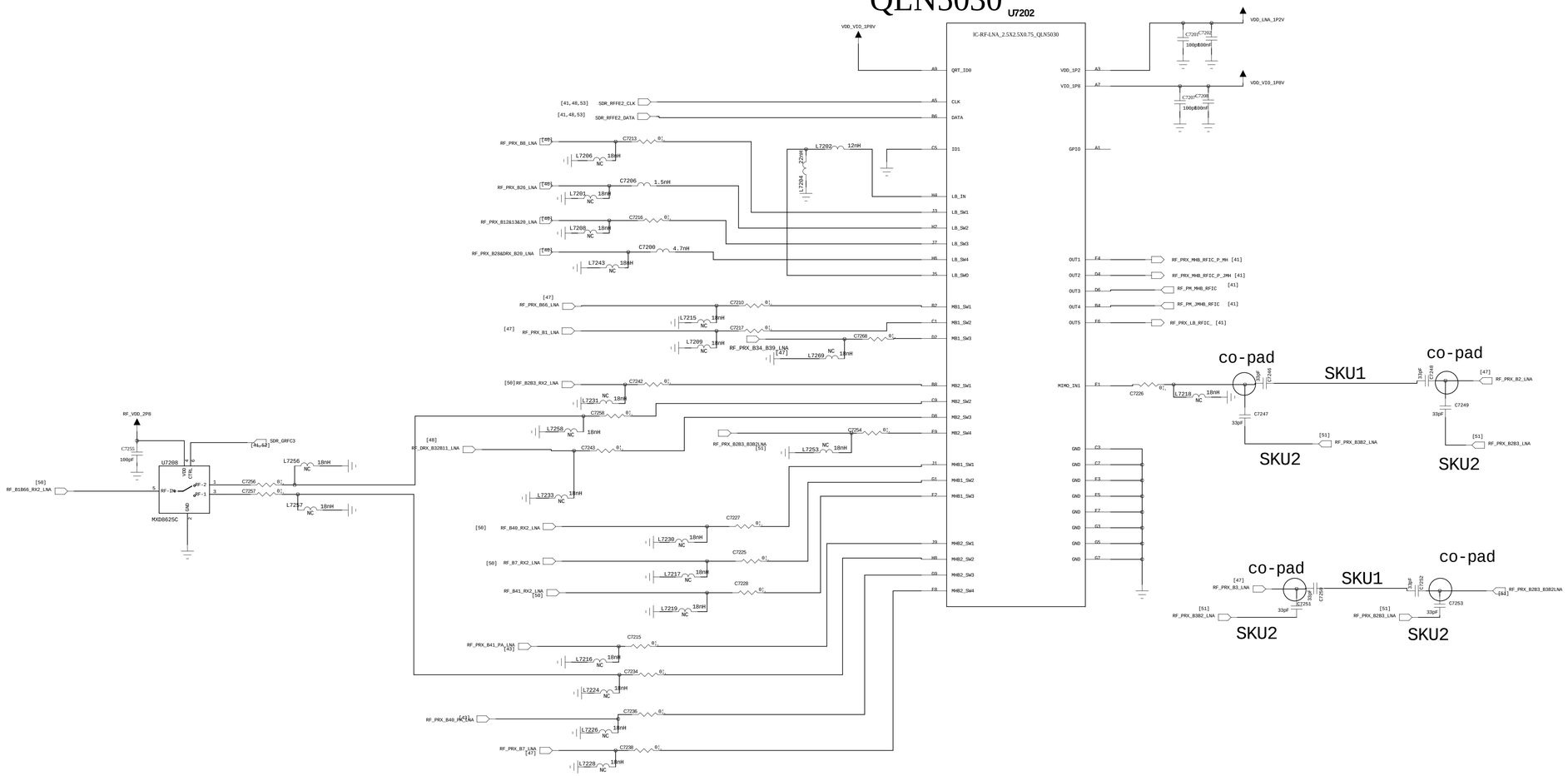

COMPANY: TINNO MOBILE TECHNOLOGY CO.LTD			
TITLE: P652A_MAIN			
DRAWN: hongxuan.wei	DATED: 20210723		
CHECKED: <Checked By>	DATED: <Checked Date>	CODE: P652A	SIZE: D
QUALITY CONTROL: <QC By>	DATED: <QC Date>	DRAWING NO: P652A	REV: V0.1
RELEASED: <Released By>	DATED: <Release Date>	SCALE: <Scale>	SHEET: 51 OF 59

REVISION RECORD			
LTR	ECO NO:	APPROVED:	DATE:

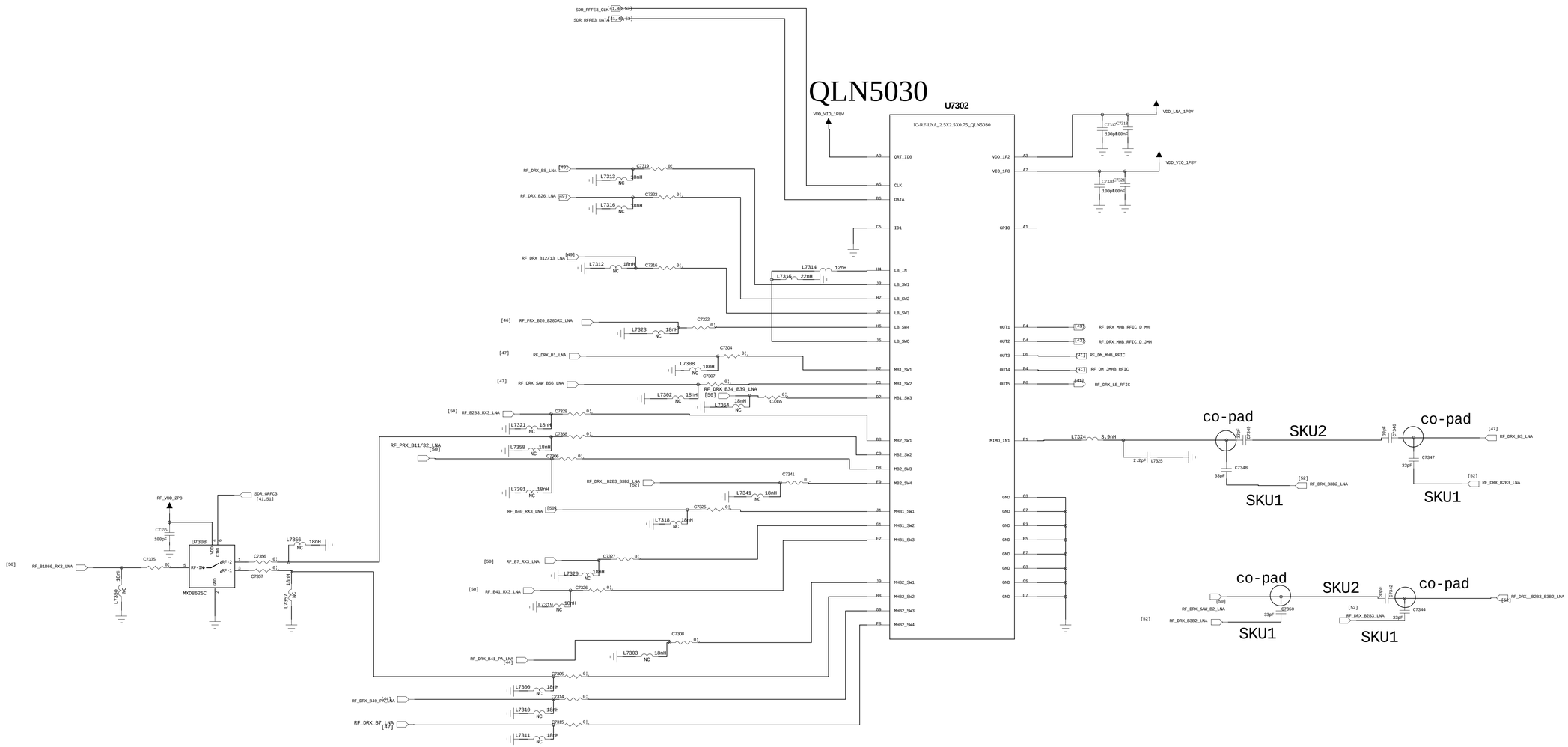

DRAWN: hongxuan.wei	DATED: 20210723	COMPANY: TINNO MOBILE TECHNOLOGY CO.LTD	
CHECKED: <Checked By>	DATED: <Checked Date>	TITLE: P652A_MAIN	
QUALITY CONTROL: <QC By>	DATED: <QC Date>	CODE: P652A / SIZE: D / DRAWING NO: P652A	REV: V0.1
RELEASED: <Released By>	DATED: <Release Date>	SCALE: <Scale>	SHEET: 52 OF 59

REVISION RECORD			
LTR	ECO NO:	APPROVED:	DATE:

N77/78 TRX
GPS

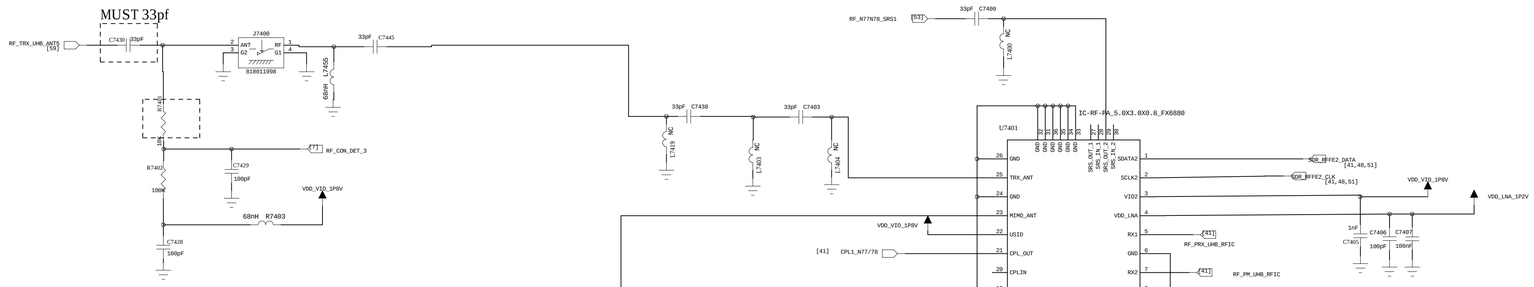

N77/78 RX2 ANT8

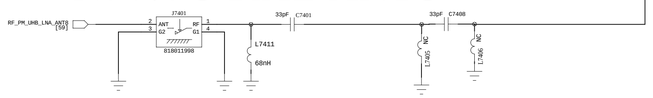

N77/78 RX1

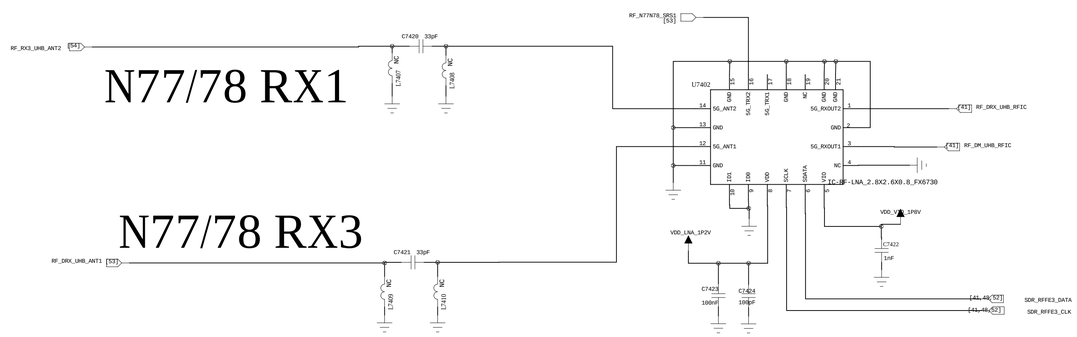

N77/78 RX3

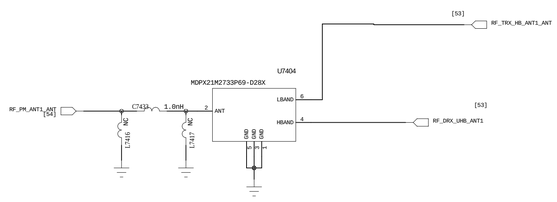

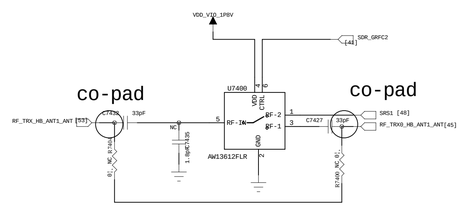

COMPANY: TINNO MOBILE TECHNOLOGY CO.LTD				
TITLE: P652A_MAIN				
DRAWN: hongxuan.wei	DATED: 20210723			
CHECKED: <Checked By>	DATED: <Checked Date>	CODE: P652A	SIZE: D	DRAWING NO: P652A	REV: V0.1
QUALITY CONTROL: <QC By>	DATED: <QC Date>			
RELEASED: <Released By>	DATED: <Release Date>	SCALE: <Scale>	SHEET: 53 OF 59	

REVISION RECORD			
LTR	ECO NO:	APPROVED:	DATE:

ANT4:
GSM: LMB RX1
WCDMA: LMB RX1
LTE: LMHB TRX1
NR: LMHB TRX1

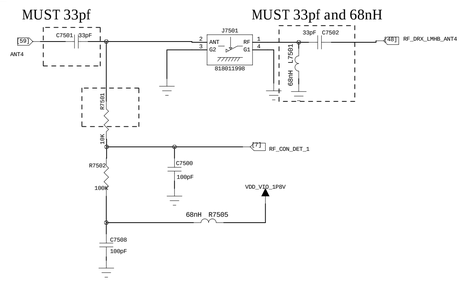

ANT 2: UHB RX3

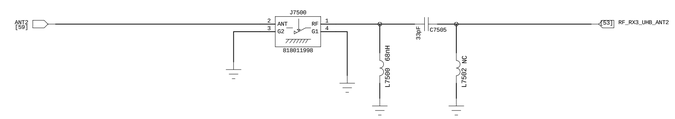

ANT0 :
GSM: LMB TRX0
WCDMA: LMB TRX0
LTE: LMB TRX0
NR: LMB TRX0

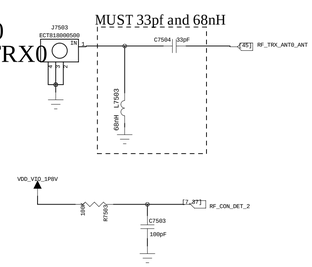

ANT1: HB TRX0+N77/78 RX1

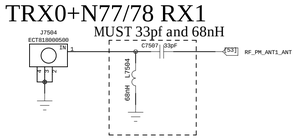

COMPANY: TINNO MOBILE TECHNOLOGY CO.LTD					
TITLE: P652A_MAIN					
DRAWN: hongxuan.wei	DATED: 20210723	CODE: P652A	SIZE: D	DRAWING NO: P652A	REV: V0.1
CHECKED: <Checked By>	DATED: <Checked Date>				
QUALITY CONTROL: <QC By>	DATED: <QC Date>				
RELEASED: <Released By>	DATED: <Release Date>	SCALE: <Scale>		SHEET: 54 OF 59	

REVISION RECORD			
LTR	ECO NO:	APPROVED:	DATE:

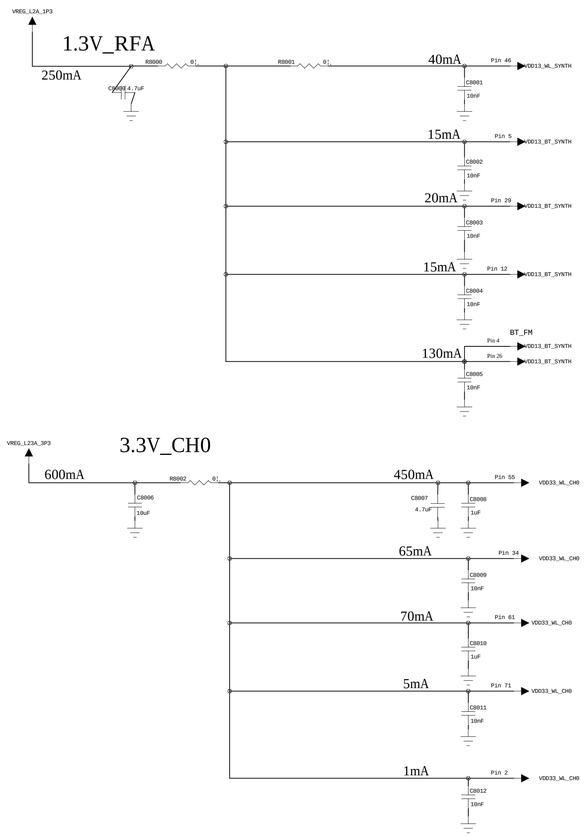

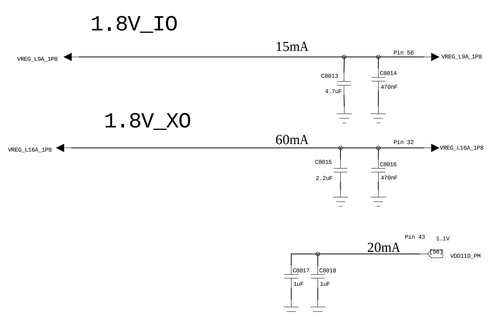

COMPANY: TINNO MOBILE TECHNOLOGY CO.LTD			
TITLE: P652A_MAIN			
DRAWN: hongxuan.wei	DATED: 20210723		
CHECKED: <Checked By>	DATED: <Checked Date>		
QUALITY CONTROL: <QC By>	DATED: <QC Date>		
RELEASED: <Released By>	DATED: <Release Date>		
CODE: P652A	SIZE: D	DRAWING NO: P652A	REV: V0.1
SCALE: <Scale>		SHEET: 55 OF 59	

REVISION RECORD			
LTR	ECO NO:	APPROVED:	DATE:

WCN3988

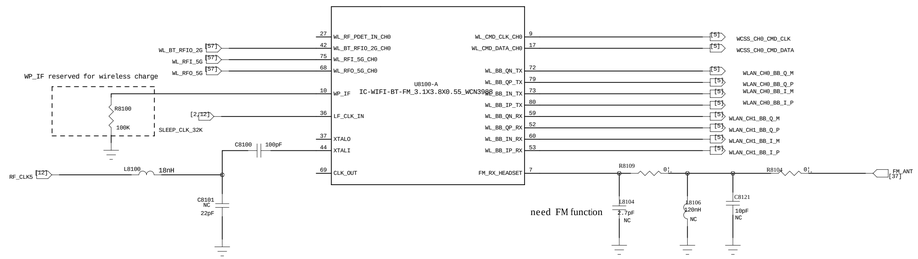

WCN3988

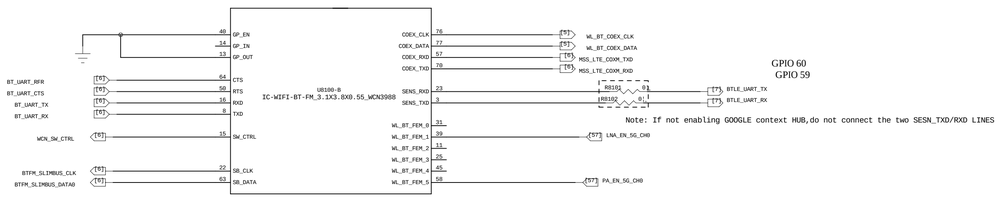

WCN3988

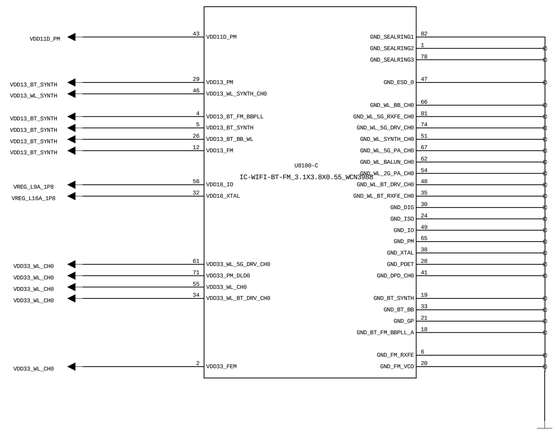

DRAWN: hongxuan.wei	DATED: 20210723	COMPANY: TINNO MOBILE TECHNOLOGY CO.LTD			
CHECKED: <Checked By>	DATED: <Checked Date>	TITLE: P652A_MAIN			
QUALITY CONTROL: <QC By>	DATED: <QC Date>	CODE: P652A	SIZE: D	DRAWING NO: P652A	REV: V0.1
RELEASED: <Released By>	DATED: <Release Date>	SCALE: <Scale>		SHEET: 56 OF 59	

WiFi BT GNSS L1 RF Circuit

REVISION RECORD			
LTR	ECO NO:	APPROVED:	DATE:

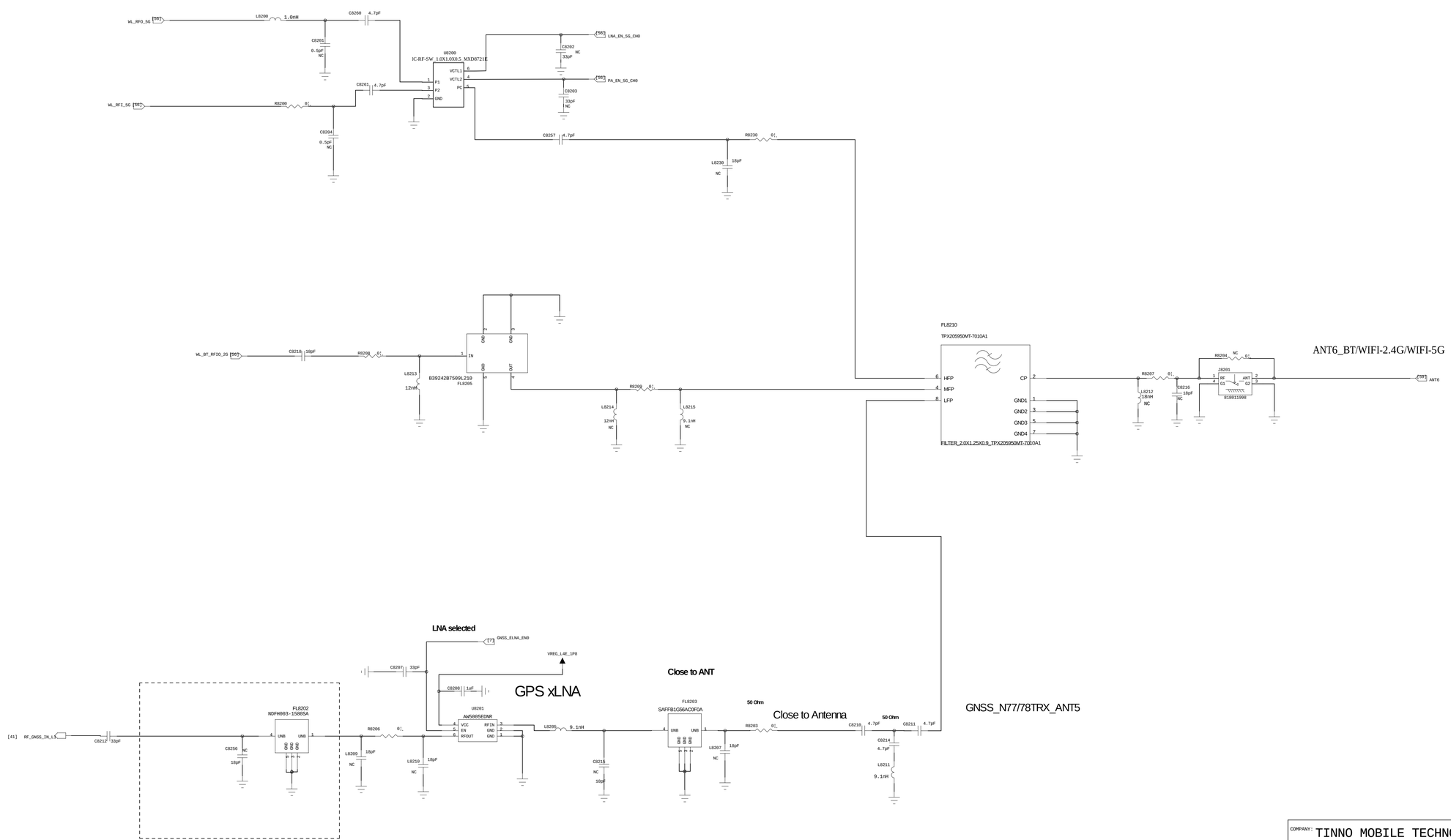

Close to SDR735 chip input pin

DRAWN: hongxuan.wei	DATED: 20210723	COMPANY: TINNO MOBILE TECHNOLOGY CO.LTD	
CHECKED: <Checked By>	DATED: <Checked Date>	TITLE: P652A_MAIN	
QUALITY CONTROL: <QC By>	DATED: <QC Date>	CODE: P652A / SIZE: D / DRAWING NO: P652A	REV: V0.1
RELEASED: <Released By>	DATED: <Release Date>	SCALE: <Scale>	SHEET: 57 OF 59

REVISION RECORD			
LTR	ECO NO:	APPROVED:	DATE:

need ESE: S3NSN4VX
NO ESE: S3NRN4V

19.2MHz

CLK VPP<1.26V [-R8503]=100pF
CLK VPP=1.8V[-R8503]=0 [,

U8500

IC-NFC_2.3X4.0X0.6_S3NRN4VXC1

need ESE: S3NSN4VX
R8517,R8524,R8520,R8521: 0hom, C8516: 4.7uF

NO ESE: S3NRN4V
R8517,R8524,R8520,R8521 C8516: NC

VSIM1_PMU

VSIM2_PMU

I2C_NFC

need ESE: S3NSN4VX
R8512,R8513,R8515,R8514,R8518,R8516 0hom

No ESE: S3NRN4V
R8512,R8513,R8515,R8514,R8518,R8516 NC

NFC antenna interface

TX:0.25MM,RX:0.1MM

wirewound inductors

50V capacitors

wirewound inductors

50V capacitors

T8500 T8501 is PESDUC2FD24VBT

DRAWN: hongxuan.wei	DATED: 20210723	COMPANY: TINNO MOBILE TECHNOLOGY CO.LTD	
CHECKED: <Checked By>	DATED: <Checked Date>	TITLE: P652A_MAIN	
QUALITY CONTROL: <QC By>	DATED: <QC Date>	CODE: P652A / SIZE: D / DRAWING NO: P652A	REV: V0.1
RELEASED: <Released By>	DATED: <Release Date>	SCALE: <Scale>	SHEET: 58 OF 59

REVISION RECORD			
LTR	ECO NO:	APPROVED:	DATE:

ANT4

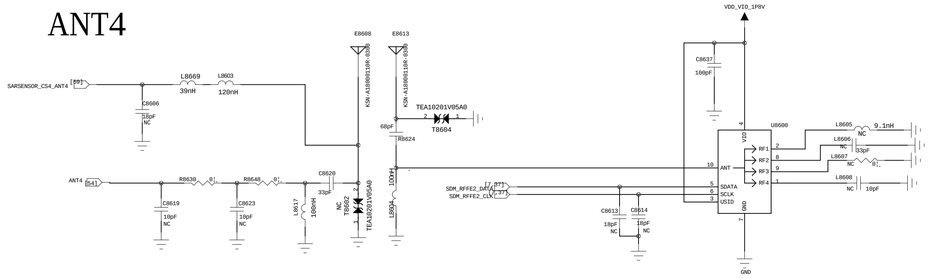

SAR sensor 1.8V

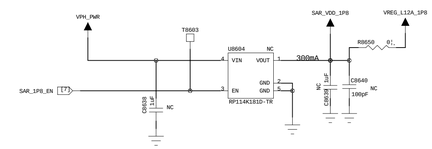

ANT8

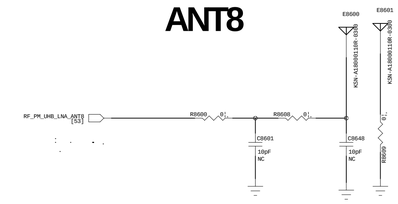

SAR SENSOR

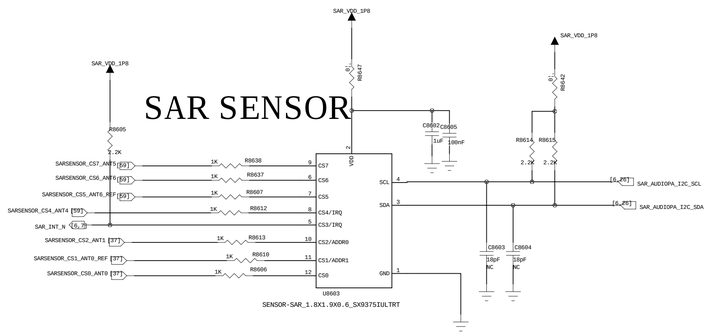

ANT7

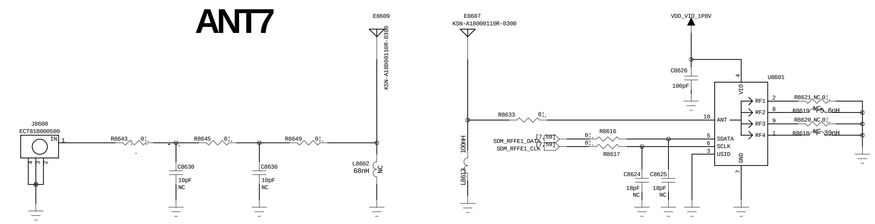

ANT3

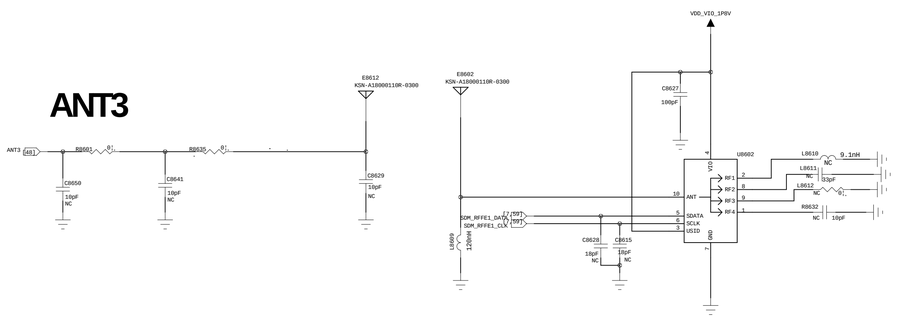

ANT6:WIFI-2.4G/5G/BT/GPS

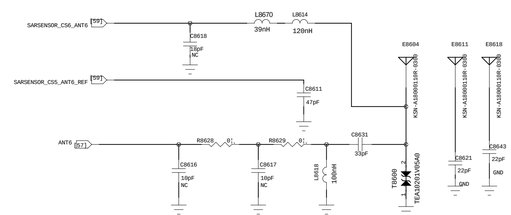

ANT2

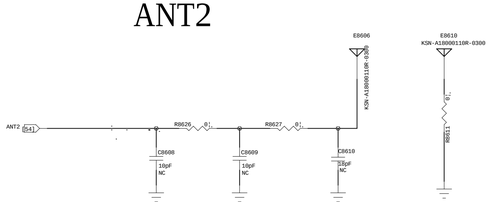

ANT5

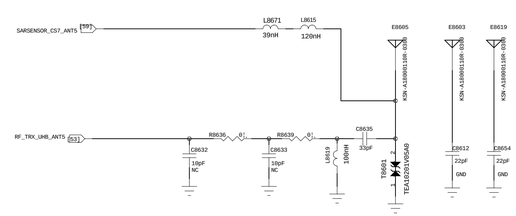

COMPANY: TINNO MOBILE TECHNOLOGY CO.LTD			
TITLE: P652A_MAIN			
DRAWN: hongxuan.wei	DATED: 2021/7/23		
CHECKED: <Checked By>	DATED: <Checked Date>		
QUALITY CONTROL: <QC By>	DATED: <QC Date>		
RELEASED: <Released By>	DATED: <Release Date>		
CODE: P652A	SIZE: D	DRAWING NO: P652A	REV: V0.1
SCALE: <Scale>		SHEET: 59 OF 59	